OPERATORS MANUAL

Universal

MARINE DIESEL ENGINES

M3-20B M-25XPB M-35B

M-40B M-50B

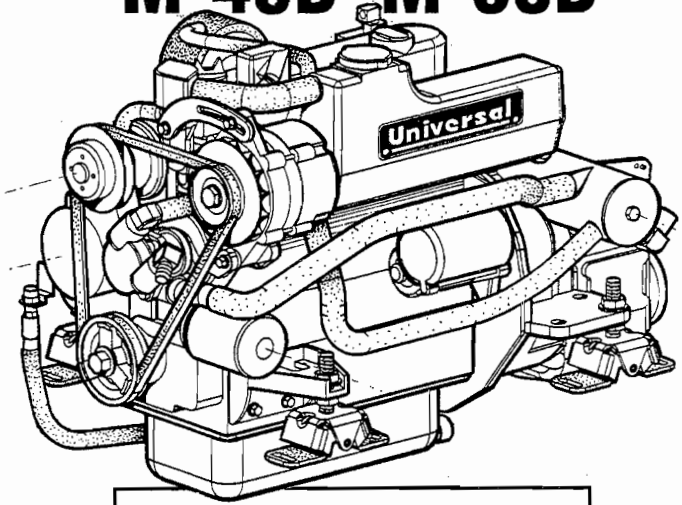

PUBLICATION 200550
1ST EDITION
JANUARY 2000

Universal
MARINE POWER

WESTERBEKE CORPORATION • MYLES STANDISH INDUSTRIAL PARK
150 JOHN HANCOCK ROAD, TAUNTON, MA 02780-7319 U.S.A.
TEL: (508)823-7677 • FAX: (508)884-9688 • WEBSITE: WWW.WESTERBEKE.COM

NMMA Member National Marine Manufacturers Association

CALIFORNIA
PROPOSITION 65 WARNING

Diesel engine exhaust and some of its constituents are known to the State of California to cause cancer, birth defects, and other reproductive harm.

⚠ WARNING:

Exhaust gasses contain Carbon Monoxide, an odorless and colorless gas. Carbon Monoxide is poisonous and can cause unconsciousness and death. Symptoms of Carbon Monoxide exposure can include:

- ***Dizziness***
- ***Nausea***
- ***Headache***
- ***Weakness and Sleepiness***
- ***Throbbing in Temples***
- ***Muscular Twitching***
- ***Vomiting***
- ***Inability to Think Coherently***

IF YOU OR ANYONE ELSE EXPERIENCE ANY OF THESE SYMPTOMS, GET OUT INTO THE FRESH AIR IMMEDIATELY. If symptoms persist, seek medical attention. Shut down the unit and do not restart until it has been inspected and repaired.



This WARNING DECAL is provided by UNIVERSAL and should be fixed to a bulkhead near your engine or generator.

UNIVERSAL also recommends installing CARBON MONOXIDE DETECTORS in the living/sleeping quarters of your vessel. They are inexpensive and easily obtainable at your local marine store.

SAFETY INSTRUCTIONS

INTRODUCTION

Read this safety manual carefully. Most accidents are caused by failure to follow fundamental rules and precautions. Know when dangerous conditions exist and take the necessary precautions to protect yourself, your personnel, and your machinery.
The following safety instructions are in compliance with the American Boat and Yacht Council (ABYC) standards.

PREVENT ELECTRIC SHOCK

⚠ WARNING: ***Do not touch AC electrical connections while engine is running, or when connected to shore power. Lethal voltage is present at these connections!***

- Do not operate this machinery without electrical enclosures and covers in place.
- Shut off electrical power before accessing electrical equipment.
- Use insulated mats whenever working on electrical equipment.
- Make sure your clothing and skin are dry, not damp (particularly shoes) when handling electrical equipment.
- Remove wristwatch and all jewelry when working on electrical equipment.
- Do not connect utility shore power to vessel's AC circuits, except through a ship-to-shore double throw transfer switch. Damage to vessel's AC generator may result if this procedure is not followed.
- Electrical shock results from handling a charged capacitor. Discharge capacitor by shorting terminals together.

PREVENT BURNS — HOT ENGINE

⚠ WARNING: ***Do not touch hot engine parts or exhaust system components. A running engine gets very hot!***

- Always check the engine coolant level at the coolant recovery tank.

⚠ WARNING: ***Steam can cause injury or death!***

- In case of an engine overheat, allow the engine to cool before touching the engine or checking the coolant.

PREVENT BURNS — FIRE

⚠ WARNING: ***Fire can cause injury or death!***

- Prevent flash fires. Do not smoke or permit flames or sparks to occur near the carburetor, fuel line, filter, fuel pump, or other potential sources of spilled fuel or fuel vapors. Use a suitable container to catch all fuel when removing the fuel line, carburetor, or fuel filters.
- Do not operate with a Coast Guard Approved flame arrester removed. Backfire can cause severe injury or death.
- Do not operate with the air cleaner/silencer removed. Backfire can cause severe injury or death.
- Do not smoke or permit flames or sparks to occur near the fuel system. Keep the compartment and the engine/generator clean and free of debris to minimize the chances of fire. Wipe up all spilled fuel and engine oil.
- Be aware — diesel fuel will burn.

PREVENT BURNS — EXPLOSION

⚠ WARNING: ***Explosions from fuel vapors can cause injury or death!***

- Follow re-fueling safety instructions. Keep the vessel's hatches closed when fueling. Open and ventilate cabin after fueling. Check below for fumes/vapor before running the blower. Run the blower for four minutes before starting your engine.
- All fuel vapors are highly explosive. Use extreme care when handling and storing fuels. Store fuel in a well-ventilated area away from spark-producing equipment and out of the reach of children.
- Do not fill the fuel tank(s) while the engine is running.
- Shut off the fuel service valve at the engine when servicing the fuel system. Take care in catching any fuel that might spill. DO NOT allow any smoking, open flames, or other sources of fire near the fuel system or engine when servicing. Ensure proper ventilation exists when servicing the fuel system.
- Do not alter or modify the fuel system.
- Be sure all fuel supplies have a positive shutoff valve.
- Be certain fuel line fittings are adequately tightened and free of leaks.
- Make sure a fire extinguisher is installed nearby and is properly maintained. Be familiar with its proper use. Extinguishers rated ABC by the NFPA are appropriate for all applications encountered in this environment.

SAFETY INSTRUCTIONS

ACCIDENTAL STARTING

⚠ WARNING: ***Accidental starting can cause injury or death!***

- Disconnect the battery cables before servicing the engine/generator. Remove the negative lead first and reconnect it last.
- Make certain all personnel are clear of the engine before starting.
- Make certain all covers, guards, and hatches are re-installed before starting the engine.

BATTERY EXPLOSION

⚠ WARNING: ***Battery explosion can cause injury or death!***

- Do not smoke or allow an open flame near the battery being serviced. Lead acid batteries emit hydrogen, a highly explosive gas, which can be ignited by electrical arcing or by lit tobacco products. Shut off all electrical equipment in the vicinity to prevent electrical arcing during servicing.
- Never connect the negative (–) battery cable to the positive (+) connection terminal of the starter solenoid. Do not test the battery condition by shorting the terminals together. Sparks could ignite battery gases or fuel vapors. Ventilate any compartment containing batteries to prevent accumulation of explosive gases. To avoid sparks, do not disturb the battery charger connections while the battery is being charged.
- Avoid contacting the terminals with tools, etc., to prevent burns or sparks that could cause an explosion. Remove wristwatch, rings, and any other jewelry before handling the battery.
- Always turn the battery charger off before disconnecting the battery connections. Remove the negative lead first and reconnect it last when disconnecting the battery.

BATTERY ACID

⚠ WARNING: ***Sulfuric acid in batteries can cause severe injury or death!***

- When servicing the battery or checking the electrolyte level, wear rubber gloves, a rubber apron, and eye protection. Batteries contain sulfuric acid which is destructive. If it comes in contact with your skin, wash it off at once with water. Acid may splash on the skin or into the eyes inadvertently when removing electrolyte caps.

TOXIC EXHAUST GASES

⚠ WARNING: ***Carbon monoxide (CO) is a deadly gas!***

- Ensure that the exhaust system is adequate to expel gases discharged from the engine. Check the exhaust system regularly for leaks and make sure the exhaust manifolds are securely attached and no warping exists. Pay close attention to the manifold, water injection elbow, and exhaust pipe nipple.
- Be sure the unit and its surroundings are well ventilated.
- In addition to routine inspection of the exhaust system, install a carbon monoxide detector. Consult your boat builder or dealer for installation of approved detectors.
- For additional information refer to ABYC T-22 (educational information on Carbon Monoxide).

⚠ WARNING: ***Carbon monoxide (CO) is an invisible odorless gas. Inhalation produces flu-like symptoms, nausea or death!***

- Do not use copper tubing in diesel exhaust systems. Diesel fumes can rapidly destroy copper tubing in exhaust systems. Exhaust sulfur causes rapid deterioration of copper tubing resulting in exhaust/water leakage.
- Do not install exhaust outlet where exhaust can be drawn through portholes, vents, or air conditioners. If the engine exhaust discharge outlet is near the waterline, water could enter the exhaust discharge outlet and close or restrict the flow of exhaust. Avoid overloading the craft.
- Although diesel engine exhaust gases are not as toxic as exhaust fumes from gasoline engines, carbon monoxide gas is present in diesel exhaust fumes. Some of the symptoms or signs of carbon monoxide inhalation or poisoning are:

  Vomiting
  Dizziness
  Throbbing in temples
  Muscular twitching
  Intense headache
  Weakness and sleepiness

AVOID MOVING PARTS

⚠ WARNING: ***Rotating parts can cause injury or death!***

- Do not service the engine while it is running. If a situation arises in which it is absolutely necessary to make operating adjustments, use extreme care to avoid touching moving parts and hot exhaust system components.

- Do not wear loose clothing or jewelry when servicing equipment; tie back long hair and avoid wearing loose jackets, shirts, sleeves, rings, necklaces or bracelets that could be caught in moving parts.
- Make sure all attaching hardware is properly tightened. Keep protective shields and guards in their respective places at all times.
- Do not check fluid levels or the drive belt's tension while the engine is operating.
- Stay clear of the drive shaft and the transmission coupling when the engine is running; hair and clothing can easily be caught in these rotating parts.

HAZARDOUS NOISE

⚠ WARNING: ***High noise levels can cause hearing loss!***

- Never operate an engine without its muffler installed.
- Do not run an engine with the air intake (silencer) removed.
- Do not run engines for long periods with their enclosures open.

⚠ WARNING: ***Do not work on machinery when you are mentally or physically incapacitated by fatigue!***

OPERATORS MANUAL

Many of the preceding safety tips and warnings are repeated in your Operators Manual along with other cautions and notes to highlight critical information. Read your manual carefully, maintain your equipment, and follow all safety procedures.

ENGINE INSTALLATIONS

Preparations to install an engine should begin with a thorough examination of the American Boat and Yacht Council's (ABYC) standards. These standards are a combination of sources including the USCG and the NFPA.

Sections of the ABYC standards of particular interest are:

H-2 Ventilation
P-1 Exhaust systems
P-4 Inboard engines
E-9 DC Electrical systems

All installations must comply with the Federal Code of Regulations (FCR).

ABYC, NFPA AND USCG PUBLICATIONS FOR INSTALLING DIESEL ENGINES

Read the following ABYC, NFPA and USCG publications for safety codes and standards. Follow their recommendations when installing your engine.

ABYC (American Boat and Yacht Council)
"Safety Standards for Small Craft"

Order from:

ABYC
15 East 26th Street
New York, NY 10010

NFPA (National Fire Protection Association)
"Fire Protection Standard for Motor Craft"

Order from:

National Fire Protection Association
11 Tracy Drive
Avon Industrial Park
Avon, MA 02322

USCG (United States Coast Guard)
"USCG 33CFR183"

Order from:

U.S. Government Printing Office
Washington, D.C. 20404

INSTALLATION

When installing UNIVERSAL engines and generators it is important that strict attention be paid to the following information:

CODES AND REGULATIONS

Strict federal regulations, ABYC guidelines, and safety codes must be complied with when installing engines and generators in a marine environment.

SIPHON-BREAK

For installations where the exhaust manifold/water injected exhaust elbow is close to or will be below the vessel's waterline, provisions must be made to install a siphon-break in the raw water supply hose to the exhaust elbow. This hose must be looped a minimum of 20" above the vessel's waterline. ***Failure to use a siphon-break when the exhaust manifold injection port is at or below the load waterline will result in raw water damage to the engine and possible flooding of the boat.***

If you have any doubt about the position of the water-injected exhaust elbow relative to the vessel's waterline under the vessel's various operating conditions, ***install a siphon-break.***

NOTE: *A siphon-break requires periodic inspection and cleaning to ensure proper operation. Failure to properly maintain a siphon-break can result in catastrophic engine damage. Consult the siphon-break manufacturer for proper maintenance.*

EXHAUST SYSTEM

The exhaust hose must be certified for marine use. The system must be designed to prevent water from entering the exhaust under any sea conditions and at any angle of the vessels hull.

A detailed 40 page Marine Installation Manual covering gasoline and diesel, engines and generators, is available from your UNIVERSAL dealer.

TABLE OF CONTENTS

Parts Identification 2
Introduction 3
- Warranty Procedures 3
- Serial Number Location 3

Admiral Control Panel 5
Captain Control Panel 6
Diesel Fuel, Engine Oil and Engine Coolant 7
Preparations for Initial Start-Up 8
Starting/Stopping Procedure 9
Break-In Procedure 10
The Daily Routine 11
- Alarms and Circuit Breakers 11

Maintenance Schedule 12
Engine Cooling Circuit 14
- Raw Water Pump 15
- Changing the Raw Water Impeller 15
- Raw Water Intake Strainer 16
- Thermostat 16
- Heat Exchanger 16

Engine Oil Change 17
Remote Oil Filter 18
Fuel System 19
- Air Cleaner/Silencer 19
- Primary the Fuel System 19
- Fuel Lift Pump 19
- Fuel Filters 20

DC Electrical System 21
- Drive Belt Adjustment 21
- Battery Care 21
- Glow Plugs 21
- Alternator Troubleshooting 22
- Alternator Diagrams 22

Wiring Diagram 23
Wiring Schematic 24
Wiring Diagram [Catalina] 25
Wiring Schematic [Catalina] 26
Engine Adjustments 27
- Throttle and Stop Assembly 27
- Valve Clearance 27
- Testing Engine Compression 28
- Testing Oil Pressure 28
- Fuel Injectors 28

Engine Troubleshooting [Chart] 29
Control Panel Troubleshooting [Chart] 31
- Troubleshooting Water Temperature 31
- Troubleshooting Oil Pressure Gauges 31

Tachometer Troubleshooting 32
Water Heater Connections 33
HBW Transmission 34
- Shaft Couplings 34
- Shift Lever 34
- Fluid Change 35
- Specifications 35
- Operating Temperature 36
- Transmission Cooler 36
- Maintenance 36

Transmission Troubleshooting [Chart] 37
- Control Cables 37

Lay-Up and Recommissioning 38
Specifications 40
Spare Parts 41
Standard Hardware Torques 42
Metric Conversions 43
European Maritime Council Certification 45

PARTS IDENTIFICATION

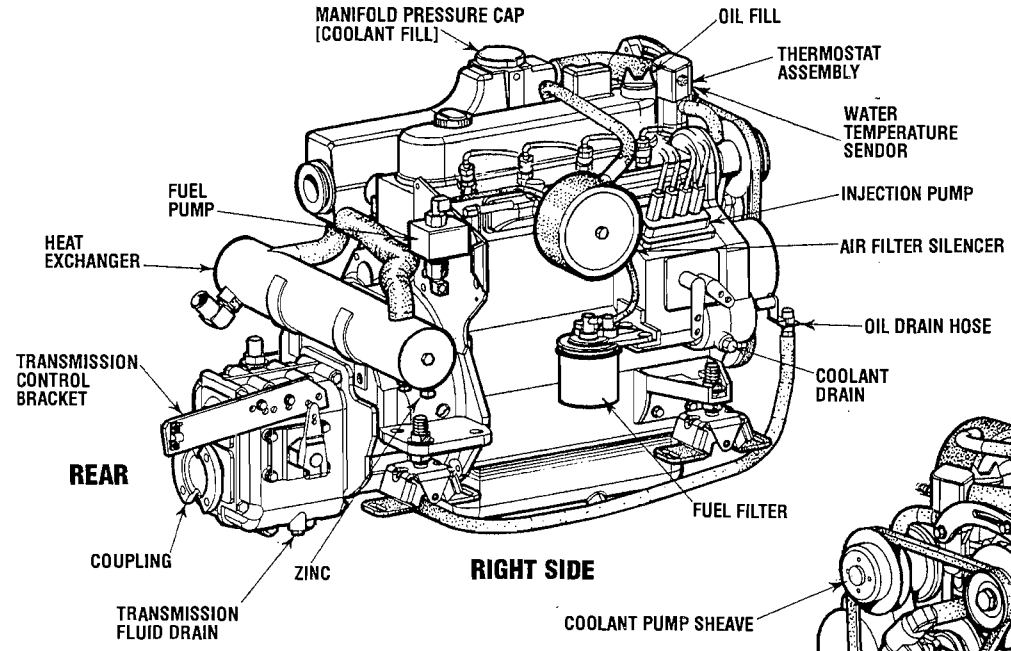

M-40B ILLUSTRATED

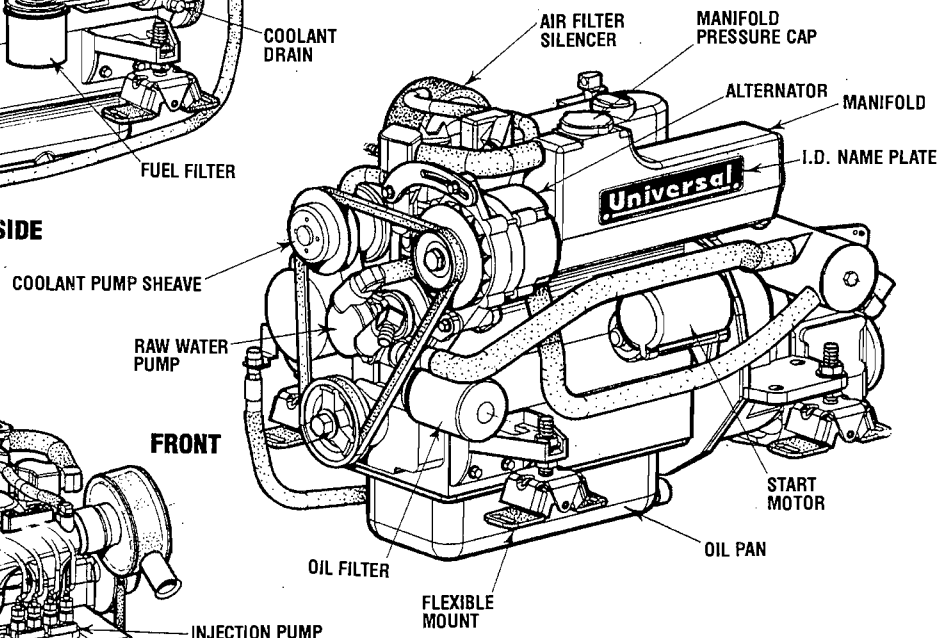

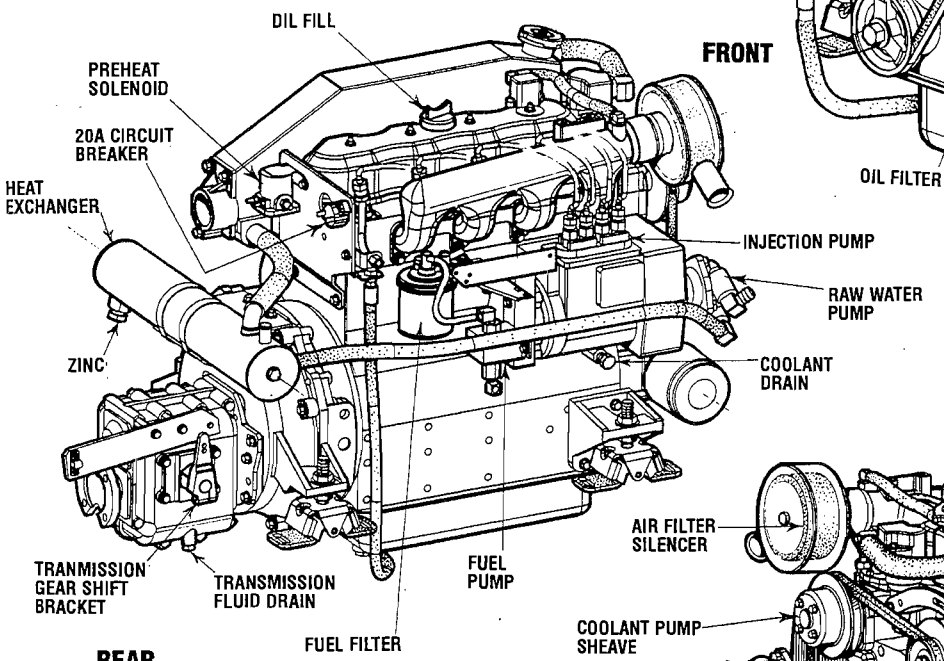

M-50B ILLUSTRATED

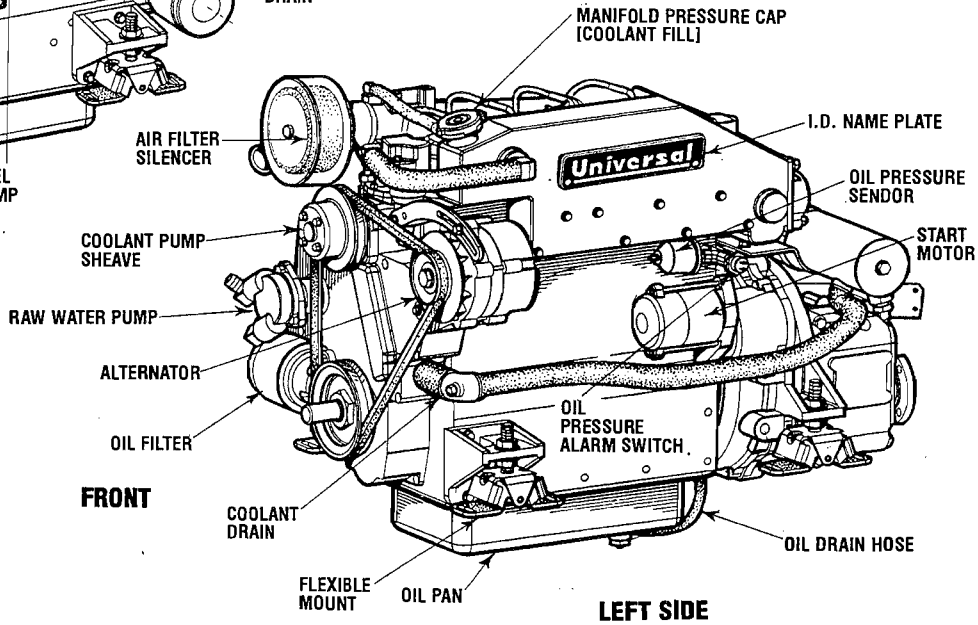

LEFT SIDE

INTRODUCTION

These new high performance UNIVERSAL marine diesel engines are a product of UNIVERSAL/WESTERBEKE'S design technology and their combined years of experience manufacturing quality marine engines. We take great pride in the superior durability and dependable performance of our marine engines. Thank you for selecting UNIVERSAL.

In order to get the full use and benefit from your engine, it is important that you operate and maintain it correctly. This manual is designed to help you do this. Please read this manual carefully and observe all the safety precautions throughout. An extensive network of UNIVERSAL WESTERBEKE distributors, dealers and service centers are available worldwide. Should your engine require servicing, contact your nearest dealer for assistance.

This is your operators manual. A Parts Catalog is also provided and a Technical Manual is available from your UNIVERSAL dealer. Also, if you are planning to install this equipment, contact your UNIVERSAL dealer for UNIVERSAL'S installation manual.

WARRANTY PROCEDURES

Your UNIVERSAL Warranty is included in a separate folder. If you have not received a customer identification card registering your warranty 60 days after submitting the warranty registration form, please contact the factory in writing with model information, including the unit's serial number and commission date.

Universal

Customer Identification

UNIVERSAL OWNER
MAIN STREET
HOMETOWN, USA

Model M-35B Ser. #D704XXXX

Expires 7/20/2000

TYPICAL CUSTOMER IDENTIFICATION CARD

The UNIVERSAL serial number is an alphanumeric number that can assist in determining the date of manufacture of your UNIVERSAL engine. The first character indicates the decade [A=1960s, B=1970s, C=1980s, D=1990, etc.], the second character represents the year in the decade, and the fourth and fifth numbers represent the month of manufacture.

E304 = April 2003

PRODUCT SOFTWARE

Product software (tech data, parts lists, manuals, brochures and catalogs) provided from sources other than UNIVERSAL are not within UNIVERSAL'S CONTROL.

UNIVERSAL CANNOT BE RESPONSIBLE FOR THE CONTENT OF SUCH SOFTWARE, MAKES NO WARRANTIES OR REPRESENTATIONS WITH RESPECT THERETO, INCLUDING ACCURACY, TIMELINESS OR COMPLETENESS THEREOF AND WILL IN NO EVENT BE LIABLE FOR ANY TYPE OF DAMAGE OR INJURY INCURRED IN CONNECTION WITH OR ARISING OUT OF THE FURNISHING OR USE OF SUCH SOFTWARE.

UNIVERSAL customers should also keep in mind the time span between printings of UNIVERSAL product software and the unavoidable existence of earlier UNIVERSAL manuals. In summation, product software provided with UNIVERSAL products, whether from UNIVERSAL or other suppliers, must not and cannot be relied upon exclusively as the definitive authority on the respective product. It not only makes good sense but is imperative that appropriate representatives of UNIVERSAL or the supplier in question be consulted to determine the accuracy and currentness of the product software being consulted by the customer.

NOTES, CAUTIONS AND WARNINGS

As this manual takes you through the operating procedures, maintenance schedules, and troubleshooting of your marine engine, critical information will be highlighted by NOTES, CAUTIONS, and WARNINGS. An explanation follows:

NOTE: *An operating procedure essential to note.*

⚠ **CAUTION:** ***Procedures, which if not strictly observed, can result in the damage or destruction of your engine.***

⚠ **WARNING:** ***Procedures, which if not properly followed, can result in personal injury or loss of life.***

INTRODUCTION

SERIAL NUMBER LOCATION

An identification nameplate that displays the engine model number and engine serial number is mounted on the side of the engine's manifold. Take the time to enter this information on the blank decal provided below. This will provide a quick reference when seeking technical information and/or ordering parts.



Fill in the information for your reference.

UNDERSTANDING THE DIESEL ENGINE

The diesel engine closely resembles the gasoline engine, since the mechanism is essentially the same. The cylinders are arranged above a closed crankcase; the crankshaft is of the same general type as that of a gasoline engine, and the diesel engine has the same types of valves, camshaft, pistons, connecting rods and lubricating system.

To a great extent, a diesel engine requires the same preventive maintenance as a gasoline engine. Most important are proper ventilation and proper maintenance of the fuel, lubricating and cooling systems. Replacement of fuel and lubricating filter elements at the time periods specified and frequent checking for contamination (water, sediment, etc.) in the fuel system are essential. Also important is the consistent use of a brand of high detergent diesel lubrication oil designed specifically for diesel engines.

The diesel engine does differ from the gasoline engine, however, in its method of handling and firing of fuel. The carburetor and ignition systems are done away with and in their place is a single component (the fuel injection pump) which performs the function of both.

ORDERING PARTS

Whenever replacement parts are needed, always provide the engine model number and engine serial number as they appear on the silver and black identification nameplate located on the manifold. You must provide us with this information so we can identify your engine. In addition, include a complete part description and part number for each part needed (see the separately furnished Parts Catalog). Also insist upon UNIVERSAL/WESTERBEKE packaged parts because will fit or generic parts are frequently not made to the same specifications as original equipment.

SPARES AND ACCESSORIES.

Certain spares will be needed to support and maintain your UNIVERSAL marine engine. Your UNIVERSAL/WESTERBEKE dealer will assist you in preparing an on board inventory of spare parts. See the *UNIVERSAL SPARE PARTS* page in this manual for a suggested list.

PROTECTING YOUR INVESTMENT

Care at the factory during assembly and thorough testing have resulted in a UNIVERSAL diesel engine capable of many thousands of hours of dependable service. However the manufacturer cannot control how or where the engine is installed in the vessel or the manner in which the unit is operated and serviced in the field. This is up to the buyer/owner-operator.

NOTE: *Six important steps to ensure long engine life:*

- ☐ Proper engine installation and alignment.
- ☐ An efficient well-designed exhaust system that includes an anti-siphon break to prevent water from entering the engine.
- ☐ Changing the engine oil and oil filters every 100 operating hours.
- ☐ Proper maintenance of all engine components according to the maintenance schedule in this manual.
- ☐ Use clean, filtered diesel fuel.
- ☐ Winterize your engine according to the *LAY-UP AND RECOMMISSIONING* section in this manual.

ADMIRAL CONTROL PANEL

.NIVERSAL offers two optional panels. Refer to the instruction page that applies to the panel you purchased.

ADMIRAL PANEL

This manually-operated control panel is equipped with a Key Switch and RPM gauge with an ELAPSED TIME meter which measures the engine's running time in hours and in 1/10 hours. The panel also includes a WATER TEMPERATURE gauge which indicates water temperature in degrees Fahrenheit, an OIL PRESSURE gauge which measures the engine's oil pressure in pounds per square inch, and a DC control circuit VOLTAGE gauge which measures the system's voltage. All gauges are illuminated when the key switch is turned **on** and remain illuminated while the engine is in operation. The panel also contains two rubber-booted pushbuttons, one for PREHEAT and one for START.

When the engine is shut down with the Key Switch turned **off**, the water temperature gauge will continue to register the last temperature reading indicated by the gauge before electrical power was turned **off**. The oil pressure gauge will fall to zero when the Key Switch is turned **off**. The temperature gauge will once again register the engine's true temperature when electrical power is restored to the gauge.

A separate alarm buzzer with harness is supplied with every Admiral Panel. The installer is responsible for electrically connecting the buzzer to the four-pin connection on the engine's electrical harness. The installer is also responsible for installing the buzzer in a location where it will be dry and where it will be audible to the operator should it sound while the engine is running. The buzzer will sound when the ignition key is turned **on** and should silence when the engine has started and the engine's oil pressure rises above 15 psi.

Note: *Refer to the WIRING DIAGRAM in this manual for the installation of two engine sendors.*

WATER TEMPERATURE GAUGE: THIS GAUGE IS GRADUATED IN DEGREES FAHRENHEIT AND IS ILLUMINATED WHILE THE KEY SWITCH IS TURNED **ON**. THE ENGINE'S NORMAL OPERATING TEMPERATURE IS 170°-190° F (77°-88°C).

OIL PRESSURE GAUGE: THIS GAUGE IS GRADUATED IN POUNDS PER SQUARE INCH (PSI) AND IS ILLUMINATED WHILE THE KEY SWITCH IS TURNED **ON**. THE ENGINE'S NORMAL OPERATING OIL PRESSURE RANGES BETWEEN 30-60 PSI.

RPM GAUGE: REGISTERS REVOLUTIONS ER MINUTE OF THE NGINE AND CAN BE RECALIBRATED FOR ACCURACY FROM THE REAR OF THE PANEL.

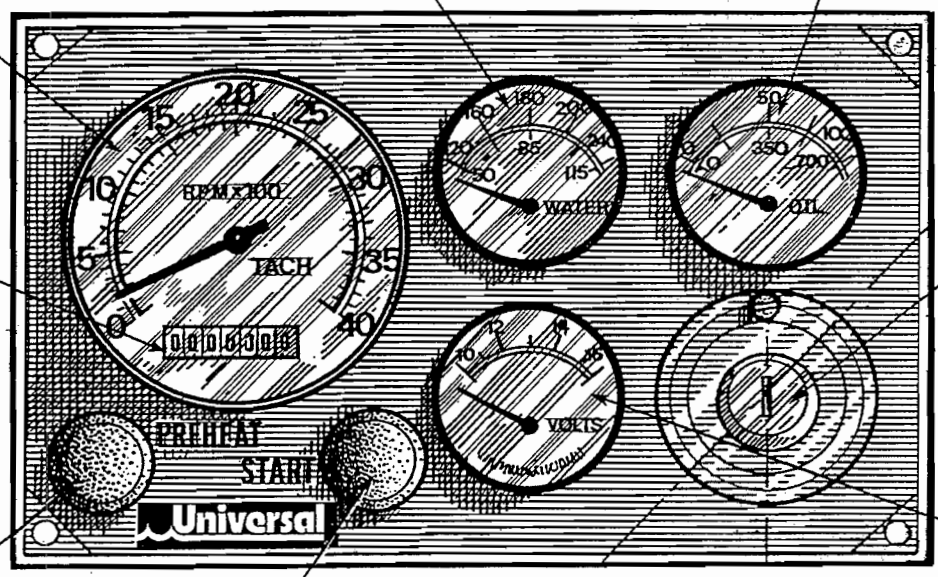

HOURMETER: REGISTERS ELAPSED TIME, AND SHOULD BE USED AS A GUIDE FOR THE MAINTENANCE SCHEDULE.

KEY SWITCH: PROVIDES POWER ONLY TO THE INSTRUMENT PANEL CLUSTER.

DC VOLTMETER: INDICATES THE AMOUNT THE BATTERY IS BEING CHARGED. SHOULD SHOW 13V TO 14V.

PREHEAT BUTTON: WHEN PRESSED, ENERGIZES THE ALTERNATOR'S REGULATOR, THE FUEL LIFT PUMP, AND THE ENGINE'S GLOW PLUGS, AND BYPASSES THE ENGINE'S OIL PRESSURE ALARM SWITCH. IN ADDITION, THIS BUTTON ENERGIZES THE **START** BUTTON.

START BUTTON: WHEN PRESSED, ENERGIZES THE STARTER'S SOLENOID WHICH CRANKS THE ENGINE. THIS BUTTON WILL NOT OPERATE ELECTRICALLY UNLESS THE **PREHEAT** BUTTON IS PRESSED AND HELD AT THE SAME TIME.

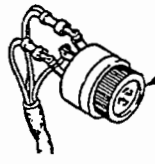

AUTOMATIC ALARM SYSTEM

HIGH WATER TEMPERATURE ALARM: AN ALARM BUZZER HAS BEEN SUPPLIED WITH THE INSTRUMENT PANEL. IF THE ENGINE'S FRESH WATER COOLANT REACHES 210° F (98°C), THIS SWITCH WILL CLOSE SOUNDING THE ALARM WHICH WILL EMIT A *CONTINUOUS* SIGNAL.

LOW OIL PRESSURE ALARM: A LOW OIL PRESSURE ALARM SWITCH IS LOCATED OFF THE ENGINE'S OIL GALLERY. THIS SWITCH MONITORS THE ENGINE'S OIL PRESSURE. SHOULD THE ENGINE'S OIL PRESSURE FALL TO 5 - 10 PSI, THE SWITCH WILL OPEN SOUNDING THE ALARM. IN THIS EVENT, THE ALARM WILL EMIT A *PULSATING* SIGNAL.

CAPTAIN CONTROL PANEL

CAPTAIN PANEL

This manually-operated control panel is equipped with a Key Switch, an RPM gauge, PREHEAT and START buttons, an INSTRUMENT TEST button and three indicator lamps, one for ALTERNATOR DISCHARGE, one for low OIL PRESSURE, and one for high ENGINE COOLANT TEMPERATURE. It also includes an alarm buzzer for low OIL PRESSURE or high WATER TEMPERATURE. The RPM gauge is illuminated when the Key Switch is turned **on** and remains illuminated while the engine is in operation.

RPM GAUGE:
REGISTERS REVOLUTIONS PER MINUTE OF THE ENGINE AND CAN BE RECALIBRATED FOR ACCURACY FROM THE REAR OF THE PANEL.

ALARM: THE ALARM WILL SOUND IF THE ENGINE'S OIL PRESSURE FALLS BELOW 5 - 10 PSI. IN THIS EVENT, THE ALARM WILL EMIT A *PULSATING* SIGNAL. THE ALARM WILL ALSO SOUND IF THE WATER TEMPERATURE IN THE FRESHWATER COOLING CIRCUIT RISES TO 210°F. IN THIS EVENT, THE ALARM WILL EMIT A SIGNAL.
NOTE: THE ALARM WILL SOUND WHEN THE KEY SWITCH IS TURNED **ON**. THIS SOUNDING IS NORMAL. ONCE THE ENGINE STARTS AND THE ENGINE'S OIL PRESSURE REACHES 15 PSI, THE ALARM WILL SILENCE.

OIL PRESSURE ALARM LIGHT

ALTERNATOR ALARM LIGHT

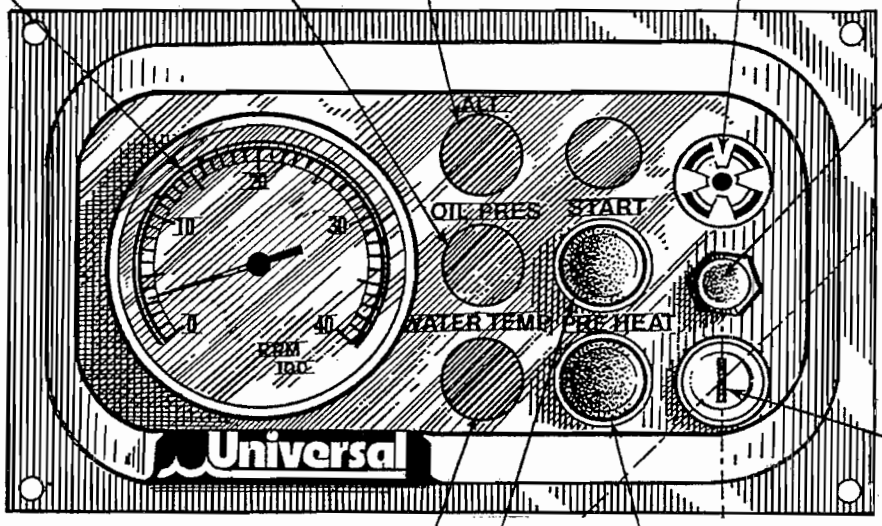

TEST BUTTON: WHEN PRESSED, TESTS THE ALTERNATOR, THE OIL PRESSURE, AND THE WATER TEMPERATURE CONTROL CIRCUITS. WHEN PRESSED, THE ALTERNATOR, THE OIL PRESSURE, AND THE WATER TEMPERATURE INDICATOR LIGHTS ILLUMINATE IN ADDITION TO SOUNDING THE ALARM BUZZER.

KEY SWITCH:
PROVIDES POWER TO THE INSTRUMENT PANEL CLUSTER AND THE DC ALTERNATOR REGULATOR TERMINAL.

WATER TEMPERATURE ALARM LIGHT

START BUTTON: WHEN PRESSED, ENERGIZES THE STARTER'S SOLENOID WHICH CRANKS THE ENGINE. THIS BUTTON WILL NOT OPERATE ELECTRICALLY UNLESS THE PREHEAT BUTTON IS PRESSED AND HELD AT THE SAME TIME.

PREHEAT BUTTON: WHEN PRESSED, ENERGIZES THE FUEL LIFT PUMP AND THE ENGINE'S GLOW PLUGS, AND BYPASSES THE ENGINE'S OIL PRESSURE ALARM SWITCH. IN ADDITION, THIS BUTTON ENERGIZES THE START BUTTON.

DIESEL FUEL, ENGINE OIL AND ENGINE COOLANT

DIESEL FUEL

Use fuel that meets the requirements or specification of Class 2-D (ASTM), and has a cetane rating of #45 or better.

Care Of The Fuel Supply

Use only clean diesel fuel! The clearance of the components in your fuel injection pump is very critical; invisible dirt particles which might pass through the filter can damage these finely finished parts. It is important to buy clean fuel, and keep it clean. The best fuel can be rendered unsatisfactory by careless handling or improper storage facilities. To assure that the fuel going into the tank for your engine's daily use is clean and pure, the following practice is advisable:

Purchase a well-known brand of fuel.

Install and regularly service a good, visual-type filter/water separator between the fuel tank and the engine. Raycor 500 MAM (micron rated filter #2 or #10) is a good example of such a filter.

ENGINE OIL

Use a heavy duty engine oil with an API classification of CF or CG-4 or better. Change the engine oil after an initial 50 hours of break-in operation, and every 100 hours of operation thereafter. For recommended oil viscosity, see the following chart:

Operating Temperature	Oil Viscosity
Above 68°F (20°C)	SAE 30 or 10W-30, 15W-40
41°-68°F (5-20°C)	SAE 20 or 10W-30, 15W-40
Below 41°F (5°C)	SAE 10W-30, 15W-40

⚠ CAUTION: ***Do not allow two or more brands of engine oil to mix. Each brand contains its own additives; additives of different brands could react in the mixture to produce properties harmful to your engine.***

ENGINE COOLANT

UNIVERSAL recommends a mixture of 50% antifreeze and 50% distilled water. Distilled water is free from the chemicals that can corrode internal engine surfaces.

The antifreeze performs double duty. It allows the engine to run at proper temperatures by transferring heat away from the engine to the coolant, and lubricates and protects the cooling circuit from rust and corrosion. Look for a good quality antifreeze that contains Supplemental Cooling Additives (SCAs) that keep the antifreeze chemically balanced, crucial to long term protection.

The distilled water and antifreeze should be premixed before being poured into the cooling circuit.

NOTE: *Look for the new environmentally-friendly long lasting antifreeze that is now available.*

Antifreeze mixtures will protect against an unexpected freeze and they are beneficial to the engine's cooling system. They retard rust and add to the life of the circulating pump seal.

ANTIFREEZE PROTECTION

Antifreeze concentration	23%	30%	35%	50%
Freezing Temperature	14°F (-5°C)	8°F (-13°C)	-4°F (-20°C)	-40°F (-40°C)

COOLANT RECOVERY TANK

A coolant recovery tank kit is supplied with each UNIVERSAL diesel engine. The purpose of this recovery tank is to allow for engine coolant expansion and contraction during engine operation, without the loss of coolant and without introducing air into the cooling system. This kit is provided and must be installed before running the engine.

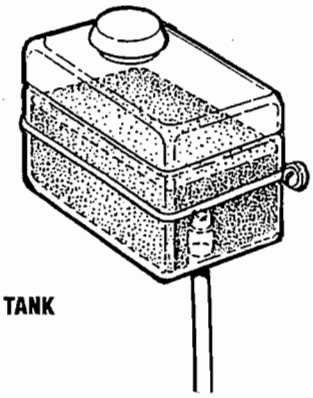

COOLANT RECOVERY TANK

PREPARATIONS FOR INITIAL START-UP

PRESTART INSPECTION

Before starting your engine for the first time or after a prolonged layoff — check the following items.

☐ Check the engine oil level; add oil to maintain the level at the high mark on the dipstick.

☐ Check the fuel supply and examine the fuel filter/separator bowls for contaminants.

☐ Check the transmission fluid level.

NOTE: *Refer to the specifications pages in this manual for fuel, oil, and transmission types and quantities.*

☐ Check the DC electrical system. Inspect wire connections and battery cable connections.

☐ Visually examine the unit. Look for loose or missing parts, disconnected wires, unattached hoses, and check threaded connections.

☐ Check the coolant level in the plastic recovery tank and at the manifold.

NOTE: *If the engine has not yet been filled with coolant, refer to the* ENGINE COOLING CIRCUIT *section of this manual.*

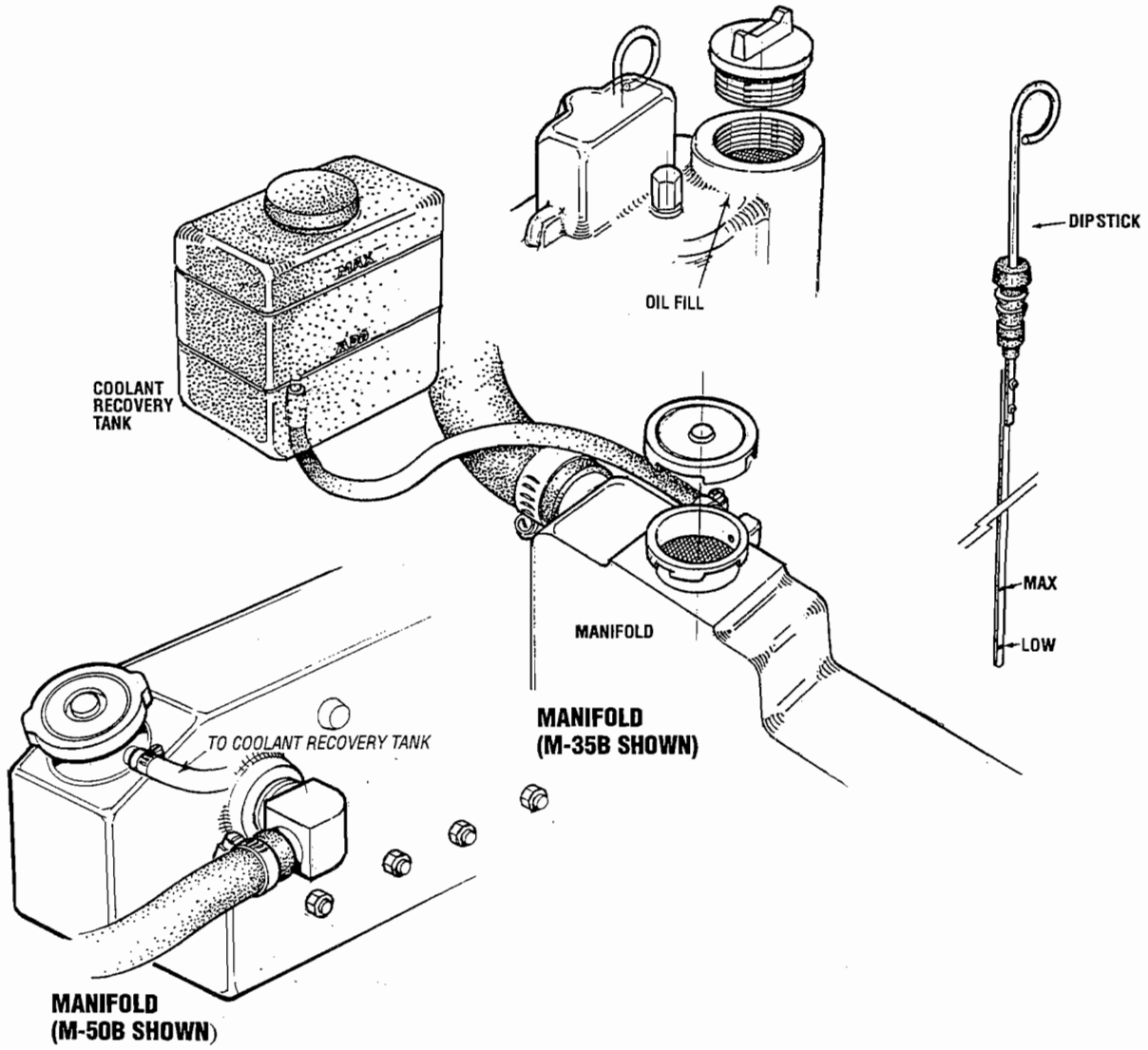

STARTING/STOPPING PROCEDURE

STARTING PROCEDURE

Place the transmission in neutral and advance the throttle control to slightly open.

> ⚠ **CAUTION:** ***Make certain the transmission is in neutral. Starting in gear could result in serious damage to your transmission, your boat, and vessels nearby.***

Turn the KEY SWITCH to the ON position (2 o'clock)

PREHEAT: Depress the PREHEAT switch. The voltmeter and panel lights, gauges and meters will be activated. The PREHEAT switch should be depressed in accordance with the following chart:

Temperature/Preheat

Atmospheric Temperature	Preheating Time
+41°F(+5°C) or higher	Approx. 10 seconds
+41°F(+5°C) to 23°F (-5°C)	Approx. 15 seconds
+23°F(-5°C) or lower	Approx. 20 seconds
Limit of continuous use	30 seconds before cranking

START: While still depressing the PREHEAT switch, depress the START switch. This will engage the starter solenoid. Upon engine starting, release the START switch. Do not release the PREHEAT switch until the oil pressure reaches 15 psi. Then as long as the high water temperature and low oil pressure protective circuits do not activate, the engine will remain energized and continue to run.

NOTE: *When starting: A voltage drop will occur when the preheat switch is depressed.*

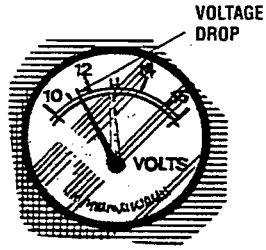

Should the engine not start when the START switch is depressed for 10 to 20 seconds, release both switches and wait 30 seconds; repeat the procedure above and preheat longer. **Never run the starter for more than 30 seconds.**

> ⚠ **CAUTION:** ***Prolonged cranking intervals without the engine starting can result in the engine exhaust system filling with raw water. This may happen because the pump is pumping raw water through the raw water cooling system during cranking. This raw water can enter the engine's cylinders by way of the exhaust manifold once the exhaust system fills. Prevent this from happening by closing the raw water supply through-hull shut-off, draining the exhaust muffler, and correcting the cause of the excessive engine cranking. Engine damage resulting from raw water entry is not a warrantable issue; the owner/operator should keep this in mind.***

Once the engine starts, check instruments for proper oil pressure and battery charging voltage.

NOTE: *Never attempt to engage the starter while the engine is running.*

NOTE: *Some unstable running may occur in a cold engine. Depressing the Preheat switch for 10-15 second intervals will help stabilize the engine RPM until the operating temperature reaches 170°-190°F (77°-88°C) and a propeller load is applied to the engine. When the engine is running and the preheat switch is depressed, a charging load on the DC alternator will be discernible.*

STARTING UNDER COLD CONDITIONS

Make certain the lubricating oil conforms with the ratings for the prevailing temperature. Check the table on the engine oil section of this manual.

The battery should be fully charged to minimize voltage drop.

Use a sufficient amount of preheat to aid in starting, see *Temperature/Preheat* chart on this page.

STOPPING PROCEDURE

To stop the engine, bring the throttle to an idle position and place the transmission in neutral. Allow the engine to idle for a few moments to stabilize temperatures. Pull the STOP lever to shut down the engine. Then turn OFF the key to close down the electric fuel pump and accessories.

Made certain the key switch is in the OFF position (12 o'clock). If the Key Switch is left ON, the battery will discharge. An engine alarm buzzer is provided to warn the operator of this condition (Key Switch ON). The best method of preventing the battery from discharge is to remove the key from the Key Switch after stopping the engine. (The extra key should be stowed in a safe place.)

BREAK-IN PROCEDURE

THE FIRST 50 HOURS

Although your engine has experienced a minimum of one hour of test operations to ensure accurate assembly and proper operation of all systems, break-in time is required. The service life of your engine is dependent upon how the engine is operated and serviced during its initial 50 hours of use.

Your new engine requires approximately 50 hours of initial conditioning operation to break in each moving part in order to maximize the performance and service life of the engine. Perform this conditioning carefully, keeping in mind the following:

1. Start the engine according to the Starting Procedure section in this manual; run the engine at fast idle while checking that all systems (raw water pump, oil pressure, battery charging) are functioning.
2. Allow the engine to warm up (preferably by running at fast idle) until the water temperature gauge moves into the 130°-140°F range.
3. While using the vessel, run the engine at varying engine rpms for the first 25 hours.
4. Avoid rapid acceleration, especially with a cold engine.
5. Use caution not to overload the engine. The presence of a gray or black exhaust, and the inability of the engine to reach its full rated rpm, are signs of an overload.
6. During the next 25 hours, the engine may be operated at varying engine rpms, with short runs at full rated rpm. Avoid prolonged idling during this break-in period.

Breaking-in a new engine basically involves seating the piston rings to the cylinder walls. This cannot be accomplished by long periods of running at idle, nor by early running at full rpm. Idle running may glaze the cylinder walls, resulting in excessive oil consumption and smoky operation. Excessive speed or heavy over-loading, especially with a cold engine, may cause scoring of the cylinder walls, producing similar results. Operate the engine in moderation during the 50-hour break-in period. (Don't baby the engine, but do not abuse it.)

RECOMMENDED RPM RANGES			
MODEL	IDLE RPM	CRUISE RPM	MAXIMUM RPM
M3-20B	1000 - 1200	2500 - 3000	3500 - 3600
M25XPB	1000 - 1200	2000 - 2500	2900 - 3000
M35B	800 - 1000	2000 - 2500	2900 - 3000
M40B	800 - 1000	2000 - 2500	2900 - 3000
M50B	800 - 1000	2000 - 2500	2700 - 2800

NOTE: *Attempting to reduce idle speed below the minimum shown may produce unstable engine operation and stalling.*

NOTE: *The propeller should be either 2 or 3 blade. It should allow the engine to reach its maximum rated rpm at full open throttle underway in forward gear to ensure the availability of rated horsepower when needed.*

NOTE: *See the* TRANSMISSION *section of this manual for break-in information on your transmission.*

THE DAILY ROUTINE

CHECK LIST

Each day before starting your engine, take a few moments to run this check list:

☐ Visually inspect the engine for fuel, oil, or water leaks.

☐ Check the oil level.

☐ Check the transmission fluid level.

☐ Check for loose wires at the alternator.

☐ Check the starting batteries level (weekly)

☐ Check drive belts for wear and proper tension (weekly).

☐ Log your engine running time. These hours relate to scheduled maintenance.

☐ Check fuel supply; always keep fuel tank(s) as full as possible.

☐ Look for clean fuel in the fuel/water separator bowl.

☐ Check the coolant level in the plastic recovery tank.

NOTE: *Excessive loss of coolant indicates a cooling system leak. Check the entire system. If necessary, use a cooling system pressure tester to pressurize the cooling system to locate the area of leakage. In cases of excessive coolant loss, refill the system as outlined in the ENGINE COOLING CIRCUIT section in this manual.*

START YOUR ENGINE

NOTE: *See STARTING/STOPPING PROCEDURE in this manual for more detailed instructions.*

1. Put transmission in neutral, throttle advanced.
2. Turn KEY to the ON position (2 o'clock)
3. Depress PREHEAT (10 to 15 seconds).
4. While pressing PREHEAT, push START. As engine fires - release START.
5. Hold PREHEAT until oil pressure reaches 15 psi and/or alarm shuts off.

NOTE: *Should engine fail to start, wait 30 seconds, repeat the above procedure, and PREHEAT longer.*

6. Allow a few minutes for the engine to warm at a comfortable rpm (approx. 1200 rpm), then reduce the rpm, shift into gear, and get underway.

> ⚠ **CAUTION:** ***When shifting the transmission, always reduce the engine rpm to idle, then shift the transmission firmly from one direction to another. A slight pause in neutral will allow the propeller to slow. Shifting at high rpm will damage the transmission/damper plate.***

ALARMS AND CIRCUIT BREAKER

ENGINE CIRCUIT BREAKER

The DC harness on the engine is protected by an engine-mounted manual reset circuit breaker (20 amps DC). Excessive current draw or electrical overload anywhere in the instrument panel wiring or engine wiring will cause the breaker to trip. In this event most engines will shut down because the open breaker disconnects the fuel supply. If this should occur, check and repair the source of the problem. After repairing the fault, reset the breaker and restart the engine.

LOW OIL PRESSURE ALARM SWITCH

A low oil pressure alarm switch is located off the engine's oil gallery. This switch's sensor monitors the engine's oil pressure. Should the engine's oil pressure fall to 5 -10 psi (0.4 - 0.7 kg/cm²), this switch will activate a **pulsating alarm**.

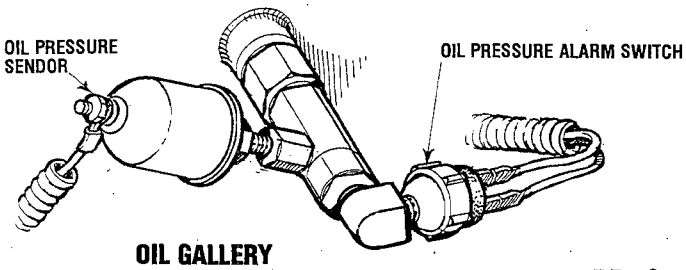

OIL GALLERY [M-50B SHOWN]

COOLANT TEMPERATURE SWITCH

A coolant temperature switch is located on the thermostat housing. This switch will activate a **continuous alarm** if the coolant's operating temperature reaches approximately 210°F (99°C).

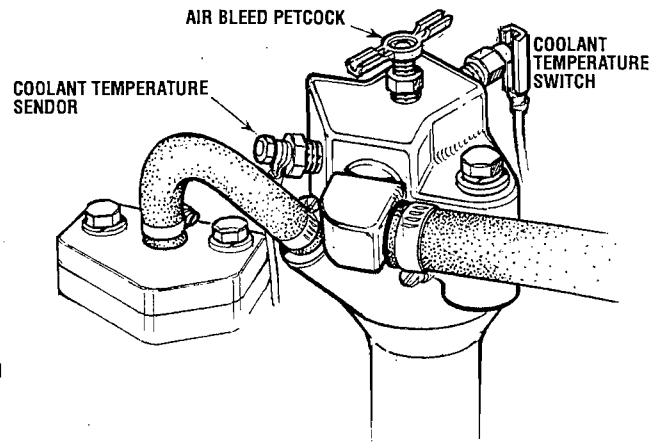

THERMOSTAT ASSEMBLY [M-50B SHOWN]

MAINTENANCE SCHEDULE

> ⚠ **WARNING:** ***Never attempt to perform any service while the engine is running. Wear the proper safety equipment such as goggles and gloves, and use the correct tools for each job. Disconnect the battery terminals when servicing any of the engine's DC electrical equipment.***

NOTE: *Many of the following maintenance jobs are simple but others are more difficult and may require the expert knowledge of a service mechanic.*

SCHEDULED MAINTENANCE	CHECK EACH DAY	HOURS OF OPERATION							EXPLANATION OF SCHEDULED MAINTENANCE
		50	100	250	500	750	1000	1250	
Fuel Supply	☐								Diesel No. 2 rating of 45 cetane or higher.
Fuel/Water Separator	☐								Check for water and dirt in fuel (drain/replace filter if necessary).
Engine Oil Level	☐								Oil level should indicate between MAX. and LOW on dipstick.
Coolant Level	☐								Check at recovery tank; if empty, check at manifold. Add coolant if needed.
Drive Belts	☐								Inspect for proper tension (3/8" to 1/2" depression) and adjust if needed. Check belt edges for wear.
Visual Inspection of Engine	☐	**NOTE:** *Please keep engine surface clean. Dirt and oil will inhibit the engine's ability to remain cool.*							Check for fuel, oil and water leaks. Inspect wiring and electrical connections. Keep bolts & nuts tight. Check for loose belt tension.
Engine Throttle and Transmission Control Cables and Shutoff Levers		☐		☐	☐	☐	☐	☐	Check for loose fittings, cotter pins, etc. Lubricate with WD-40 or equivalent.
Adjust Engine Idle Speed	☐								Adjust to (750-1200 rpm).
Fuel Filter		☐		☐	☐	☐	☐	☐	Initial change at 50 hrs, then change every 250 hrs.
Starting Batteries (and House Batteries)	☐								Every 50 operating hours check electrolyte levels and make sure connections are very tight. Clean off excessive corrosion.
Engine Oil and Filter	☐	☐	☐	☐	☐	☐	☐	☐	Initial engine oil & filter change at 50 hrs., then change both every 100 hours.
***Torque Cylinder Head Hold Down Bolts**									At engine overhaul or cylinder head overhaul.
Lubricate Panel Key Switch with "Lockeze"			☐						At first 100 hrs., then each year at winterizing.
Transmission Fluid		☐		☐	☐	☐		☐	Initial fluid change at 50 hrs., then every 250 hrs. or once a year.
Air Cleaner				☐	☐	☐	☐	☐	Clean the filter and element.
Exhaust System		☐				☐		☐	Initial check at 50 hrs., then every 500 hrs. Inspect for leaks. Check siphon break operation. Check the exhaust elbow for carbon and/or corrosion buildup on inside passages; clean and replace as necessary. Check that all connections are tight.

MAINTENANCE SCHEDULE

NOTE: *Use the engine hour meter gauge to log your engine hours or record your engine hours by running time.*

SCHEDULED MAINTENANCE	CHECK EACH DAY	HOURS OF OPERATION							EXPLANATION OF SCHEDULED MAINTENANCE
		50	100	250	500	750	1000	1250	
Engine Hoses		☐	☐	☐	☐	☐	☐	☐	Hose should be hard & tight. Replace if soft or spongy. Check & tighten all hose clamps.
Heat Exchanger Zinc Anode		☐	☐	☐	☐	☐	☐	☐	Clean or replace anode. Open heat exchanger end cap and clean out debris. Remove every 1000 hours for professional cleaning and pressure testing.
Electric Fuel Lift Pump Filter (if applicable)		☐		☐	☐	☐	☐	☐	Clean at 50 hours, then clean every 250 hours.
Raw Water Pump				☐		☐		☐	Remove pump cover and inspect impeller for wear; replace if needed. Also replace gasket. Lubricate both when reassembled. Inspect pump for internal wear, cover plate wear and cam wear.
Coolant System					☐			☐	Drain, flush, and refill cooling system with appropriate antifreeze mix.
***Fuel Injectors**						☐			Check and adjust injection opening pressure and spray condition (see *Engine Adjustments*).
***Starter Motor**					☐			☐	Check solenoid and motor for corrosion. Remove and lubricate. Clean and lubricate the Starter motor pinion drive.
***Preheat Circuit**					☐			☐	Check operation of preheat solenoid. Remove and clean glow plugs; check resistance (1.1-1.2 ohms).
***Engine Cylinder Compression and Valve Clearance**					☐			☐	Incorrect valve clearance will result in poor engine performance; check compression pressure and timing, and adjust valve clearances.
DC Alternator				☐		☐		☐	Check DC charge from alternator. Check mounting bracket; tighten electrical connections.
Heat Exchanger							☐		Remove, have professionally cleaned and pressure tested.
***Engine Transmission Damper Plate**							☐		Chattering at idle and low rpms is an indication of damper plate wear. Remove and replace.

*UNIVERSAL recommends this service be performed by an authorized mechanic.

ENGINE COOLING CIRCUIT

DESCRIPTION

The engine is fresh water cooled (engine coolant) by an engine-mounted heat exchanger. Raw water is pumped through the heat exchanger by a gear-driven, positive displacement impeller pump. After the raw water cools the engine coolant in the heat exchanger, it mixes with the engine's exhaust gases, cools the exhaust gases, and discharges overboard.

The engine's coolant is circulated by a belt-driven centrifugal-type metal impeller pump mounted on the front of the engine. The engine's coolant temperature is thermostatically controlled.

The engine's coolant must be changed according to the maintenance schedule in this manual. If the coolant is allowed to become contaminated, it can lead to overheating problems.

> **⚠CAUTION:** ***Proper cooling system maintenance is critical; a substantial number of engine failures can be traced back to cooling system corrosion.***

A coolant recovery tank allows for engine coolant expansion and contraction during engine operation, without any significant loss of coolant and without introducing air into the cooling system. This tank is best located at or above the engine manifold level, and should be easily accessible.

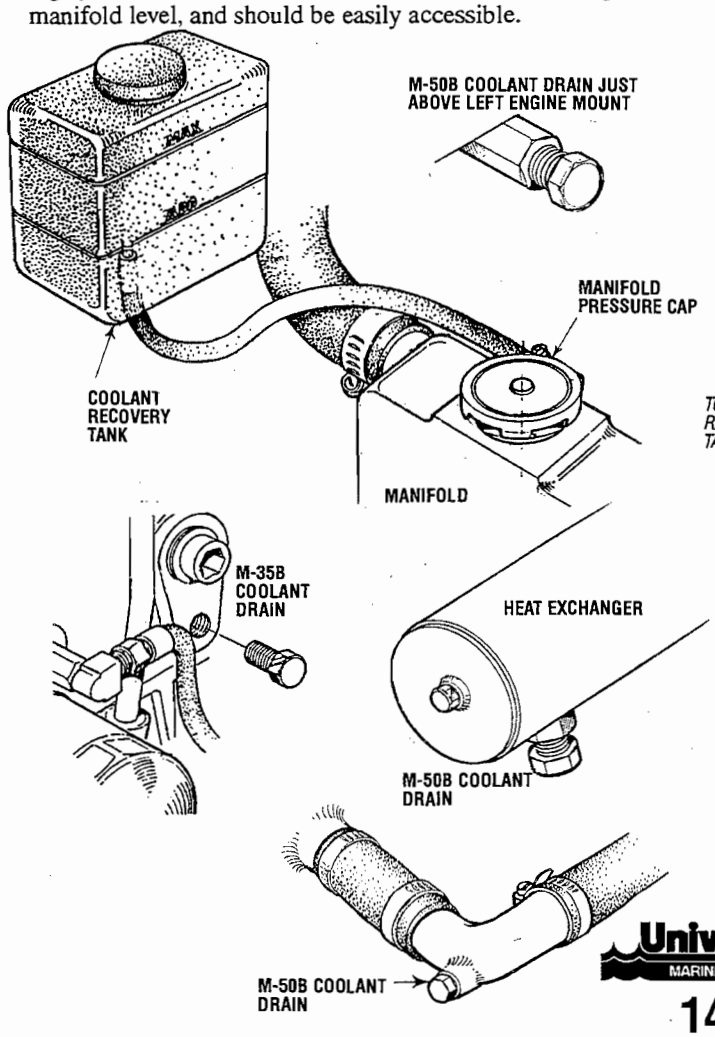

Drain the engine coolant by loosening the drain plug on the engine block and opening the manifold pressure cap. Flush the system with fresh water, then start the refill process. See the Parts Identification photos in this manual for locations.

NOTE: *The petcock on the heat exchanger can also be used to help drain engine coolant.*

> **⚠WARNING:** ***Beware of the hot engine coolant. Wear protective gloves.***

To Refill With Coolant

With the engine running in idle, slowly pour clean premixed coolant into the manifold.

NOTE: *Open the petcocks on the thermostat housing and heat exchanger to help remove air from the system. When a steady flow of coolant appears at the drain plug opening, close the water drain plug and continue to fill the system until the manifold remains full. Close the petcock on the heat exchanger when antifreeze flows from it.*

Monitor the coolant in the manifold and add as needed. Fill the manifold to the filler neck and install the pressure cap.The petcock on the thermostat should also be opened when refilling to allow trapped air to escape.

Remove the cap on the coolant recovery tank, fill with coolant mix to halfway between LOW and MAX, and replace the cap. Run the engine, close all petcocks and observe the coolant expansion flow into the recovery tank.

After checking for leaks, stop the engine and allow it to cool. Coolant should draw back into the cooling system as the engine cools down. Add coolant to the recovery tank if needed. Clean up any spilled coolant.

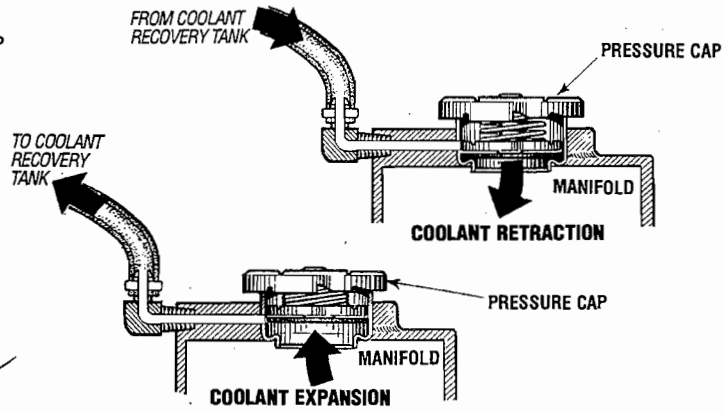

NOTE: *Periodically check the condition of the pressure cap. Ensure that the upper and lower rubber seals are in good condition and check that the vacuum valve opens and closes tightly. Carry a spare cap.*

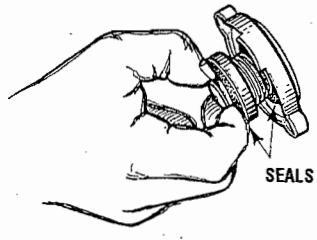

ENGINE COOLING CIRCUIT

RAW WATER COOLING CIRCUIT

The raw water flow is created by a positive displacement impeller pump. This pump draws water directly from the ocean, lake, or river from a through-hull opening through a hose to the water strainer. The raw water passes from the strainer through the pump to a heat exchanger (through the heat exchanger tubes) where it cools the engine's circulating fresh water coolant. The raw water is then discharged into the water injected exhaust elbow, mixing with, and cooling the exhaust gasses. This mixture of exhaust gas and raw water is driven through the stern tube and overboard.

Raw Water Pump

The raw water pump is a self-priming, rotary pump with a non-ferrous housing and a neoprene impeller. The impeller has flexible vanes which wipe against a curved cam plate within the impeller housing, producing the pumping action. On no account should this pump be run dry as water acts as a lubricant for the impeller. There should always be a spare impeller and impeller cover gasket aboard (an impeller kit). Raw water pump impeller failures occur when lubricant (raw water) is not present during engine operation. Such failures are not warrantable, and operators are cautioned to make sure raw water flow is present at start-up.

Changing the Raw Water Impeller

1. Close the raw water intake.
2. Remove the inlet and outlet port hoses from the pump, noting the port location and positioning.
3. Remove the pump assembly and its gasket from the engine.
4. Remove the three hex head screws that hold the housing to the cover.
5. Tap the housing/cover assembly on its side to loosen and separate the cover from its housing.
6. Remove the cover and its O-ring and remove the impeller gasket and plate.
7. Remove the retaining ring (circlip) and pry out the impeller. Take care not to lose the key off the shaft's keyway.

> ⚠ **CAUTION:** ***If any of the vanes have broken off the impeller they must be found to prevent blockage in the cooling circuit. They often can be found in the heat exchanger.***

8. Replace the gasket, impeller, and O-ring.
9. Apply a film of petroleum jelly or silicone to the inner surface of the impeller housing.

NOTE: *Just coat the surface, do not over apply.*

10. Install the impeller gasket and O-ring.
11. Mount the pump to the engine taking care that the end seal and gasket are in place. Do not tighten the pump mounting screws, just finger tight.
12. Reassemble the hose connections and **open the raw water intake.**
13. Start the engine in idle, this will allow the pump to align itself with its drive shaft.
14. Stop the engine and tighten the pump assembly mounting screws.
15. Start and run the engine, check for leaks and check for a normal operating temperature.

NOTE: *Should a failure occur with the pumps internal parts (seals and bearings) it may be more cost efficient to purchase a new pump. The price of individual parts along with labor costs could match the price of a new pump.*

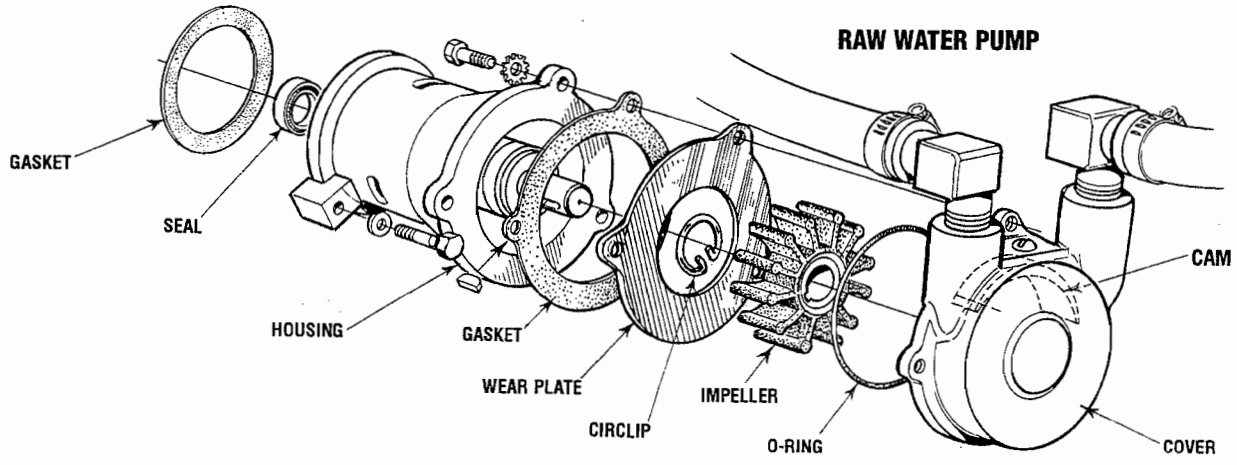

ENGINE COOLING CIRCUIT

THERMOSTAT

A thermostat, located near the manifold at the front of the engine, controls the coolant temperature as it continuously flows through the closed cooling circuit. When the engine is first started the closed thermostat prevents coolant from flowing (some coolant is by-passed through a hole in the thermostat to prevent the exhaust manifold from overheating). As the engine warms up the thermostat gradually opens. The thermostat is accessible and can be checked, cleaned, or replaced easily. Carry a spare thermostat and gasket.

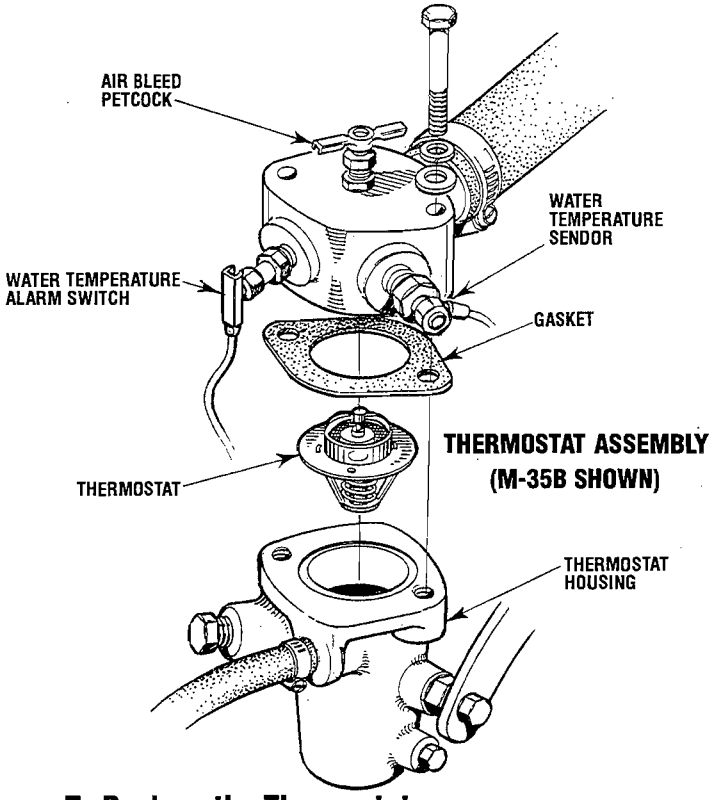

THERMOSTAT ASSEMBLY (M-35B SHOWN)

To Replace the Thermostat

Remove the two cap screws and disassemble as illustrated. When assembling the new thermostat and gasket put a thin coat of sealant on both sides of the gasket before pressing in place. Run the engine and check for normal temperatures and that there are no leaks at the thermostat housing.

Heat Exchanger

The heat exchanger is a copper tube which encloses a number of small copper tubes. Raw water is pumped through the small copper tubes and the freshwater coolant from the engine is circulated around the copper tubes. The raw water removes heat from the freshwater coolant. To keep the heat exchanger operating efficiently, it should be removed from the engine every 1000 hours to be thoroughly cleaned and pressure tested.

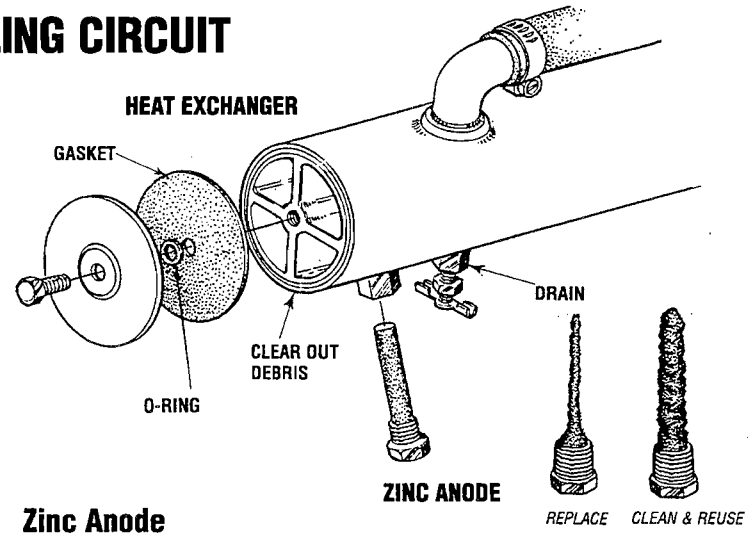

Zinc Anode

A zinc anode (or pencil) is located in the raw water cooling circuit within the heat exchanger. The purpose of the zinc anode is to sacrifice itself to electrolysis action taking place in the raw water cooling circuit, thereby reducing the effects of electrolysis on other components of the system. The condition of the zinc anode should be checked monthly and the anode cleaned or replaced, as required. Spare anodes should be carried onboard. The area in the exchanger where the anode is located should periodically be cleaned of anode debris.

RAW WATER INTAKE STRAINER

NOTE: *Always install the strainer at or below the waterline so the strainer will always be self-priming.*

A clean raw water intake strainer is a vital component of the engine's cooling system. Include a visual inspection of this strainer when making your periodic engine check. The water in the glass should be clear.

Perform the following maintenance after every 100 hours of operation:

1. Close the raw water seacock.
2. Remove and clean the strainer filter.
3. Clean the glass.
4. Replace the sealing washer if necessary.
5. Reassemble and install the strainer.
6. **Open the seacock.**
7. Run the engine and check for leaks.

NOTE: *Also follow the above procedure after having run hard aground.*

If the engine temperature gauge ever shows a higher than normal reading, the cause may be that silt, leaves or grass may have been caught up in the strainer, slowing the flow of raw water through the cooling system

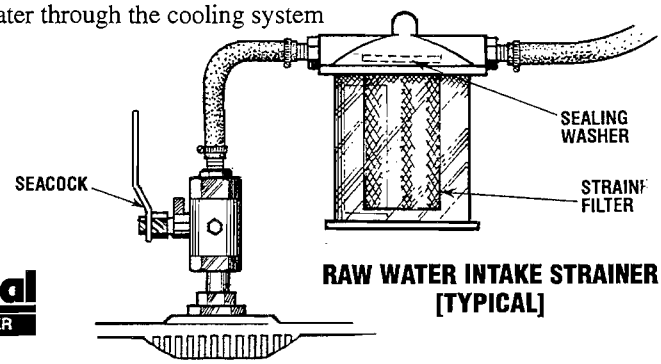

RAW WATER INTAKE STRAINER [TYPICAL]

ENGINE OIL CHANGE

DRAIN THE SUMP

The engine oil should be warm. Remove the oil drain hose from its attachment bracket and lower it into a container and allow the oil to drain, or attach a pump to the end of the drain hose and pump out the old oil. Make sure the oil drain hose is capped and properly secured in its holder after all the old oil has been drained.

NOTE: *Thread size for the lube oil drain hose capped end is 1/4 NPT.*

Always observe the old oil as it is removed. A yellow/gray emulsion indicates the presence of water in the oil. Although this condition is rare, it does require prompt attention to prevent serious damage. Call a competent mechanic if water is present in the oil. Raw water present in the oil can be the result of a fault in the exhaust system attached to the engine and/or a siphoning of raw water through the raw water cooling circuit into the exhaust, filling the engine. This problem is often caused by the poor location or the lack of an anti-siphon valve. See UNIVERSAL'S Installation Manual.

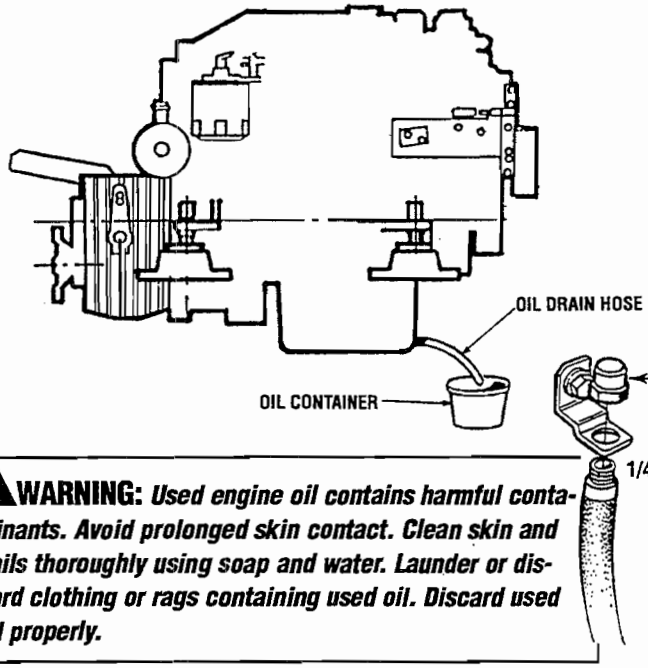

⚠WARNING: ***Used engine oil contains harmful contaminants. Avoid prolonged skin contact. Clean skin and nails thoroughly using soap and water. Launder or discard clothing or rags containing used oil. Discard used oil properly.***

Replacing the Oil Filter

When removing the used oil filter, you may find it helpful and cleaner to punch a hole in the upper and lower portion of the old filter to drain the oil from it into a container before removing it. This helps to lessen spillage.

NOTE: *Do not punch this hole without first loosening the filter to make certain it will come off!*

An automotive filter wrench should be helpful in removing the old oil filter. Place some paper towels and a plastic bag around the filter when unscrewing it to catch any oil left in the filter. Inspect the old oil filter as it is removed to make sure that the rubber sealing gasket comes off with the old oil filter. If this rubber sealing gasket remains sealed against the engine block, gently remove it. When installing the new oil filter element, wipe the filter gasket's sealing surface on the engine block free of oil and apply a thin coat of clean engine oil to the rubber gasket on the new oil filter. Screw the filter onto the threaded oil filter stub, and tighten the filter firmly by hand.

NOTE: *Use genuine UNIVERSAL oil filters - generic filters are not recommended.*

REFILL THE OIL SUMP

Add fresh oil through the filler cap. After refilling, run the engine for a few moments while checking the engine's oil pressure. Make sure there is no leakage around the new oil filter or from the oil drain system, and then stop the engine. Then check the quantity of oil with the lube oil dipstick. If the engine requires additional oil, fill to, but not over, the high mark on the dipstick.

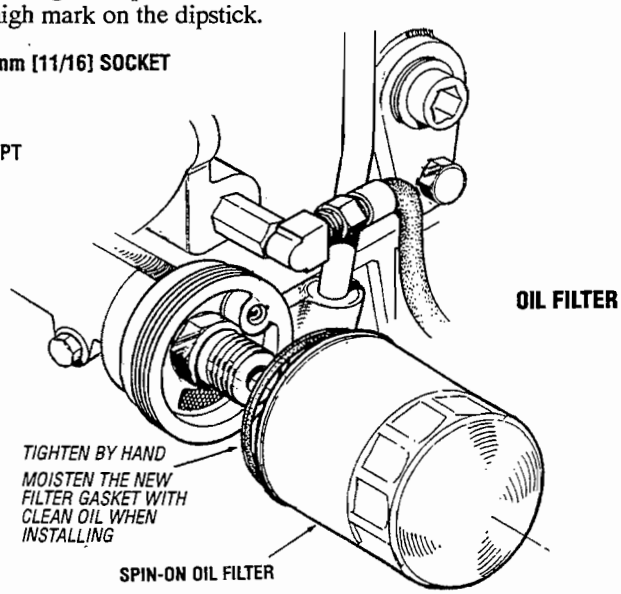

REMOTE OIL FILTER (OPTIONAL)

INSTALLATION

This popular accessory is used to relocate the engine's oil filter from the engine to a more convenient location such as an engine room bulkhead.

NOTE: *Refer to ENGINE OIL CHANGE in this manual for instructions on removing the oil filter.*

To install, simply remove the engine oil filter and thread on WESTERBEKE's remote oil filter kit as shown. Always install this kit with the oil filter facing down as illustrated.

Contact your WESTERBEKE dealer for more information.

NOTE: *Westerbeke is not responsible for engine failure due to incorrect installation of the Remote Oil Filter.*

> ⚠ **CAUTION:** ***It is vital to install the oil lines correctly. If the oil flows in the reverse direction, the bypass valve in the filter assembly will prevent the oil from reaching the engine causing an internal engine failure. If there is no oil pressure reading, shutdown immediately and check the hose connections.***

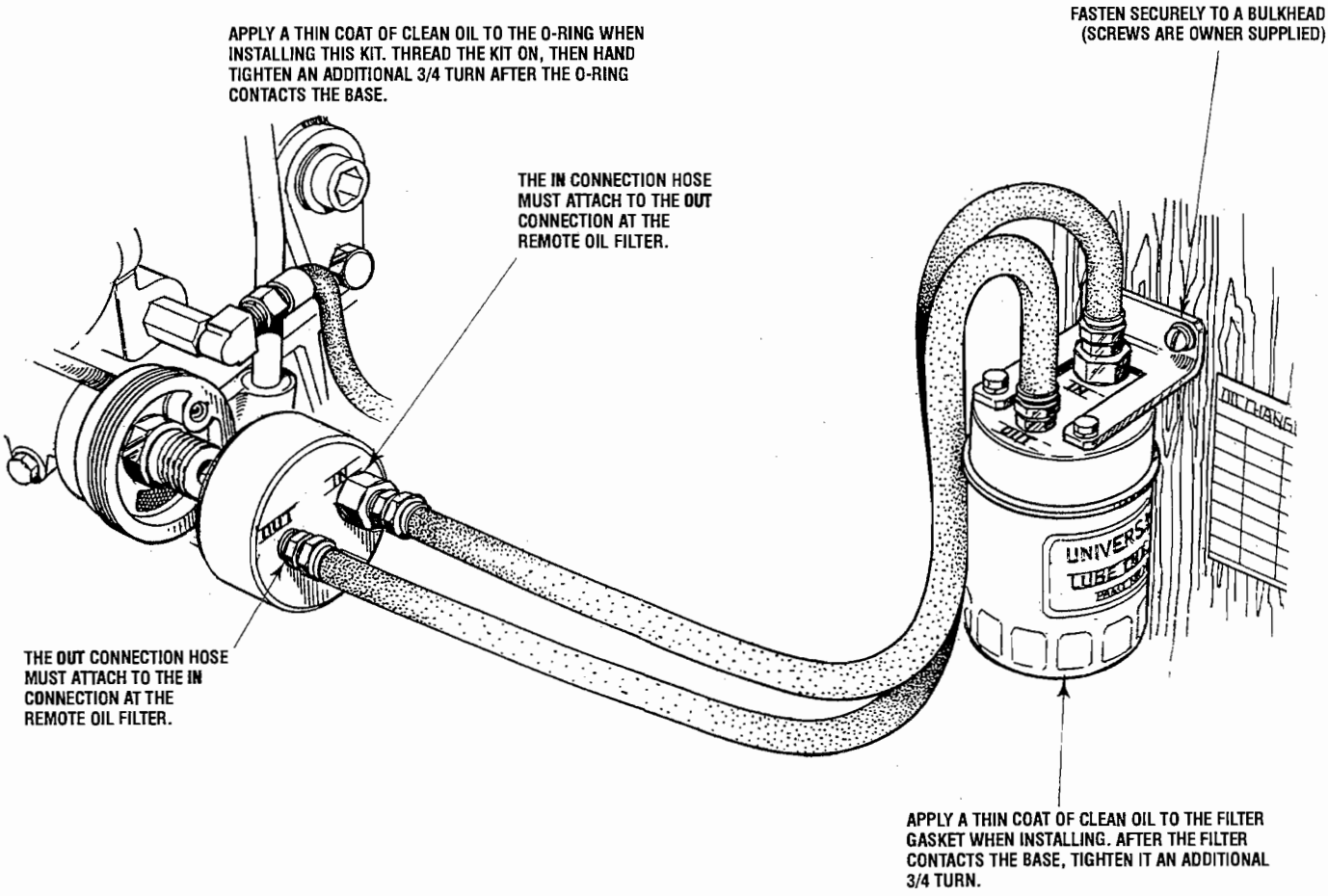

FUEL SYSTEM

FUEL ADDITIVES

If fungus or bacteria is causing fuel problems, you should have an authorized dealer correct these problems. Then use a diesel fuel biocide to sterilize the fuel (follow the manufacturer's instructions).

SPARES

While the likelihood of having to service the fuel system at sea is slim, the possibility does exist. Therefore, we recommend that banjo washers, injector seat washers, and a fuel filter be carried on board at all times. Purchase needed spares from your local UNIVERSAL dealer or distributor. If a leak should develop at a banjo washer that cannot be corrected by a simple tightening of the fitting, replace the sealing washer.

FUEL LIFT PUMP

The on-engine fuel system is virtually self priming. Under ordinary circumstances the engine's electric fuel lift pump, which is energized by the key switch/preheat button, will supply a continuous flow of fuel from the tank. This fuel is drawn through the fuel/water separator to the engine lift pump, the primary spin-on fuel filter, and the injection pump.

> ⚠ **WARNING:** ***Do not allow smoking or open flames near the fuel system when servicing. Also provide proper ventilation.***

FUEL PRIMING

If it becomes necessary to bleed air from the system, use the following procedure:

Loosen all the high pressure injector lines (not injectors) and crank the engine starter motor; as fuel spurts from between the nut and the line, tighten the injector lines in sequence and then tighten the bleed screw.

NOTE: *Do not attempt this procedure on a hot engine.*

> ⚠ **WARNING:** ***Always wear protective clothing, safety glasses and gloves when bleeding high pressure injector lines.***

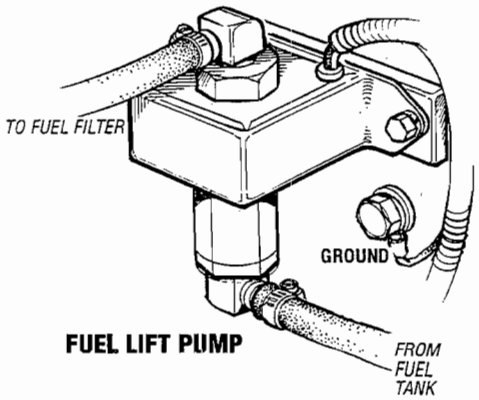

FUEL LIFT PUMP

FUEL RETURN LINE SHUT-OFF VALVE [M-50B]

A shut-off valve is located on the fuel return line near the injection pump. **This valve must be fully open.**

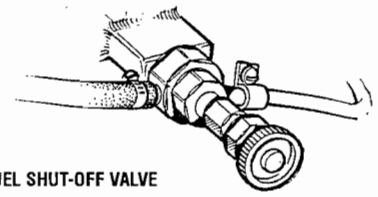

FUEL SHUT-OFF VALVE

Air Cleaner/Silencer

Some UNIVERSAL engines use a replaceable air filter element wrapped around a metal canister. This element can be removed and brushed off or cleaned with an air hose. When it become too contaminated it can be replaced. The canister with its interior element should also be removed and cleaned periodically. Simply wash the assembled unit in a non-flammable cleaning solvent. Use this same cleaning procedure for other UNIVERSAL air cleaners that use a similar type canister.

NOTE: *To operate efficiently a diesel engine must intake a continuous volume of clear air. Hard starting, an erratic idle, and black exhaust smoke are all symptoms of a restricted air intake.*

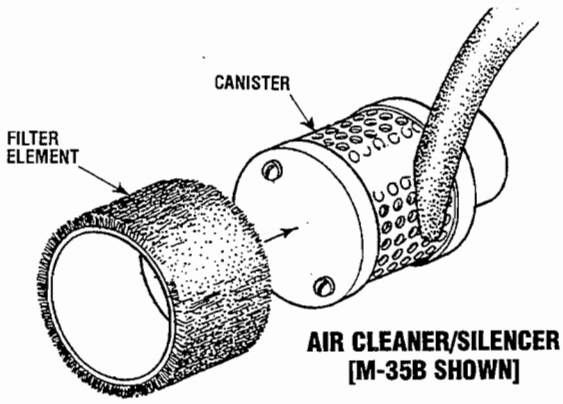

AIR CLEANER/SILENCER [M-35B SHOWN]

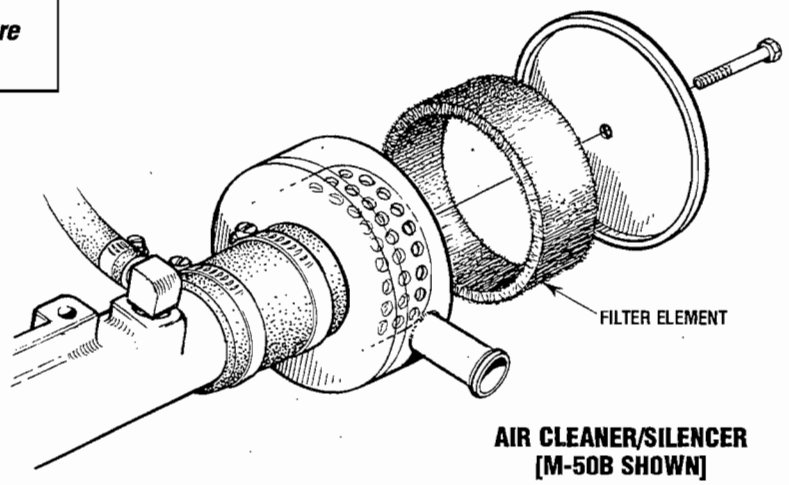

AIR CLEANER/SILENCER [M-50B SHOWN]

⚠WARNING: ***Shut off the fuel valve at the tank when servicing the fuel system. Take care in catching any fuel that may spill. DO NOT allow any smoking, open flames or other sources of fire near the fuel system when servicing. Ensure proper ventilation exists when servicing the fuel system.***

FUEL FILTERS

The fuel injection pump and the fuel injectors are precisely manufactured and they must receive clean diesel fuel, free from water and dirt. To ensure this flow of clean fuel, the fuel must pass through at least two fuel filters, a fuel/water separator and the engine's spin-on fuel filter. Visually inspect, clean, and change these filters according to the maintenance schedule in this manual.

1. Shut fuel supply off.
2. Loosen the fuel filter, turning counterclockwise with a filter wrench.
3. Using a rag, wipe clean the sealing face on the housing bracket so the new filter can be seated properly.
4. Lightly oil the sealing O-ring on the new filter. To reinstall, turn the filter assembly clockwise carefully until the O-ring contacts the sealing surface of the housing bracket. Turn 2/3 further with the filter wrench.
5. Turn on the fuel and start the engine. The normal preheat function should quickly prime the system and the engine should start.

NOTE: *The cartridge contains fuel. Take care not to spill it during disassembly. Perform the* PRIMING THE FUEL SYSTEM *after replacing the spin-on filter.*

FUEL FILTER

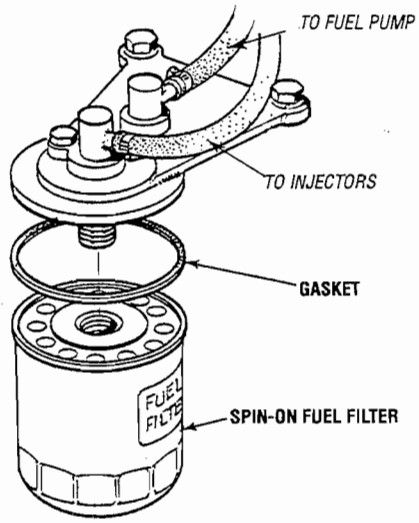

FUEL WATER SEPARATOR

A primary fuel filter of the water separating type must be installed between the fuel tank and the engine to remove water and other contaminants from the fuel before they can be carried to the fuel system on the engine.

Most installers include a type of filter/water separator with the installation package as they are aware of the problems that contaminants in the fuel can cause.

A typical fuel filter/water separator is illustrated in this diagram. This is the Raycor Model 500 MA. Keep in mind that if a water separator type filter is not installed between the fuel supply tank and engine-mounted fuel system, any water in the fuel will affect the fuel pump, engine filter, and injection equipment. The owner/operator is responsible for making certain the fuel reaching the engine's injection equipment is free of impurities. This process is accomplished by installing and maintaining a proper filtration/separation system.

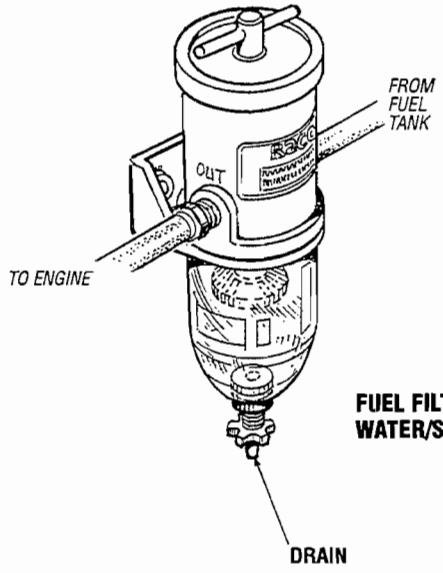

FUEL FILTER WATER/SEPARATOR

DC ELECTRICAL SYSTEM

ENGINE 12 VOLT DC CONTROL CIRCUIT

The engine has a 12 volt DC electrical control circuit that is shown on the wiring diagrams that follow. Refer to these diagrams when troubleshooting or when servicing the DC electrical system on the engine.

DRIVE BELT ADJUSTMENT

> ⚠ **CAUTION:** ***Drive belts must be properly tensioned. Loose drive belts will not provide proper alternator charging and will eventually damage the alternator. Drive belts that are too tight will pull the alternator out of alignment and/or cause the alternator to wear out prematurely.***

Belt tension adjustment is made by pivoting the alternator on its base mounting bolt.

1. Loosen the alternator adjusting strap bolt and the base mounting bolt.
2. Pivot the alternator on the base mounting bolt to the left or right as required.
3. Tighten the base mounting bolt and the adjusting strap bolt.
4. Operate the engine for about 5 minutes at idle, then shut down and recheck belt tension.

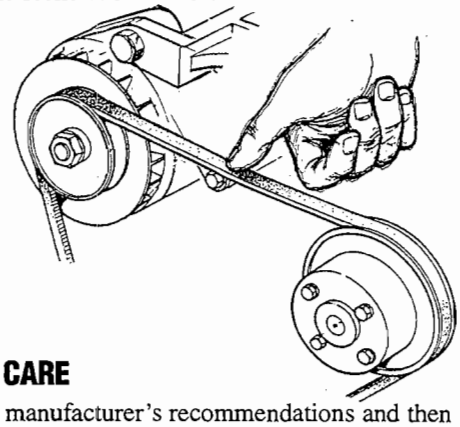

BATTERY CARE

Review the manufacturer's recommendations and then establish a systematic maintenance schedule for your engine starting batteries and house batteries.

- Monitor your voltmeter for proper charging during engine operation.
- Check the electrolyte level and specific gravity with a hydrometer.
- Use only distilled water to bring electrolytes to a proper level.
- Make certain that battery cable connections are clean and tight to the battery posts (and to your engine).
- Keep your batteries clean and free of corrosion.

GLOW PLUGS

The glow plugs are wired through the preheat solenoid. When PREHEAT is pressed at the control panel this solenoid should "click" on and the glow plug should begin to get hot.

Inspection

To inspect the plug, remove the electrical terminal connections, then unscrew or unclamp each plug from the cylinder head. Thoroughly clean each plug's tip and threads with a soft brush and cleaning solution to remove all the carbon and oil deposits. While cleaning, examine the tip for wear and burn erosion; if it has eroded too much, replace the plug.

Testing

An accurate way to test glow plugs is with an ohmmeter. Touch one prod to the glow plug's wire connection, and the other to the body of the glow plug, as shown. A good glow plug will have a 1.0 - 1.5 ohm resistance. This method can be used with the plug in or out of the engine. You can also use an ammeter to test the power drain (8 - 9 amps per plug).

> ⚠ **WARNING:** ***These glow plugs will become very hot to the touch. Be careful not to burn your fingers when testing the plugs.***

Re-install the plugs in the engine and test them again. The plugs should get very hot (at the terminal end) within 7 to 15 seconds. If the plugs don't heat up quickly, check for a short circuit. When reinstalling the glow plugs, use anti-seize compound on the threads.

> ⚠ **WARNING:** ***Do not keep a glow plug on for more than 30 seconds.***

GLOW PLUG TIGHTENING TORQUE: **7 - 11 Ft-lb (1.0 - 1.5 m-kg)**

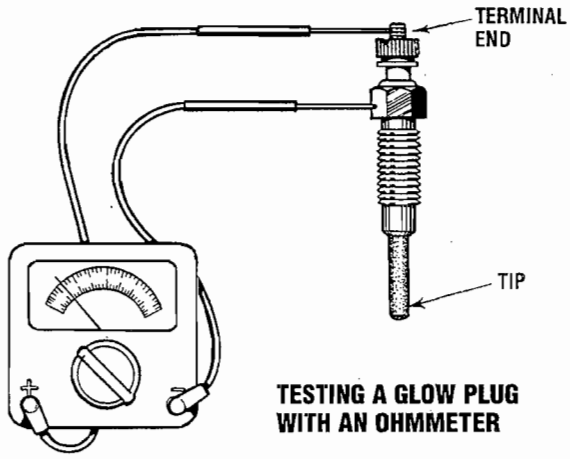

TESTING A GLOW PLUG WITH AN OHMMETER

DC ELECTRICAL SYSTEM

DESCRIPTION

The charging system consists of an alternator with a mounted voltage regulator, an engine DC wiring harness, a mounted DC circuit breaker, and a battery and connection wires. Because of the use of integrated circuits (IC's) the electronic voltage regulator is very compact and is mounted internally or on the back of the alternator.

Alternator Troubleshooting

If you suspect that the alternator is not producing enough voltage to charge the engine's battery, check the following:

⚠ WARNING: ***A failed alternator can become very hot. Do not touch until the alternator has cooled down.***

☐ Make certain your alternator is securely mounted.

☐ Check the drive belts for proper tension.

☐ Inspect for loose or disconnected wires at the alternator.

NOTE: *An isolator with a diode, a solenoid, or a battery selector switch is usually mounted in the circuit to isolate the batteries so the starting battery is not discharged along with the house batteries. If the isolator is charging the starting battery but not the house battery, the alternator is OK and the problem is in the battery charging circuit.*

⚠ WARNING: ***Shut off the engine battery switch or disconnect from the battery when working on the engine electrical system.***

Checking for Proper Voltage

If you suspect the alternator has failed perform the following tests with the engine off:

1. Using a voltmeter, connect the voltmeter red wire clip to the output terminal B+.
2. Connect the voltmeter negative wire to any ground on the engine.
3. Check the battery voltage. It should read 12 to 13 volts.
4. Check the voltage between the alternator (+) positive terminal B and any engine ground. If the circuit is good, the voltage at the alternator should be the same as the battery (unless there's an isolator in the circuit, then the reading would be zero).

⚠ CAUTION: ***To avoid damage to the battery charging circuit, never shut off the engine battery switch when the engine is running!***

⚠ WARNING: ***Before starting the engine make certain that everyone is clear of moving parts! Keep away from sheaves and belts during test procedures.***

5. Start the engine.
6. The voltage reading for a properly operating alternator should be between 13.5 and 14.5 volts. If your alternator is over- or undercharging, have it repaired at a reliable service shop.

NOTE: *Before removing the alternator for repair, use your voltmeter to ensure that 12 volts DC excitation is present at the R terminal if the previous test showed only battery voltage at the B output terminal.*

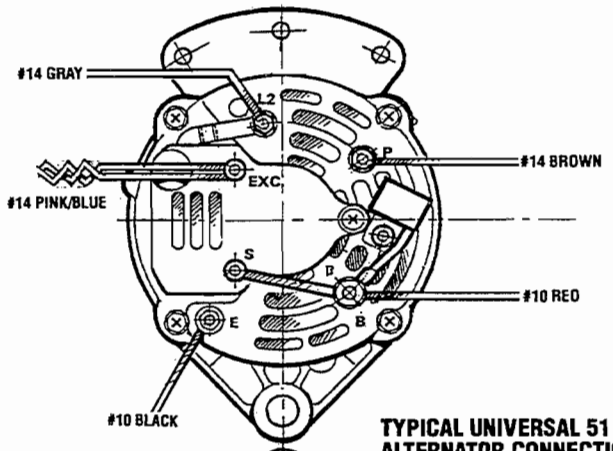

TYPICAL UNIVERSAL 51 AMP ALTERNATOR CONNECTIONS

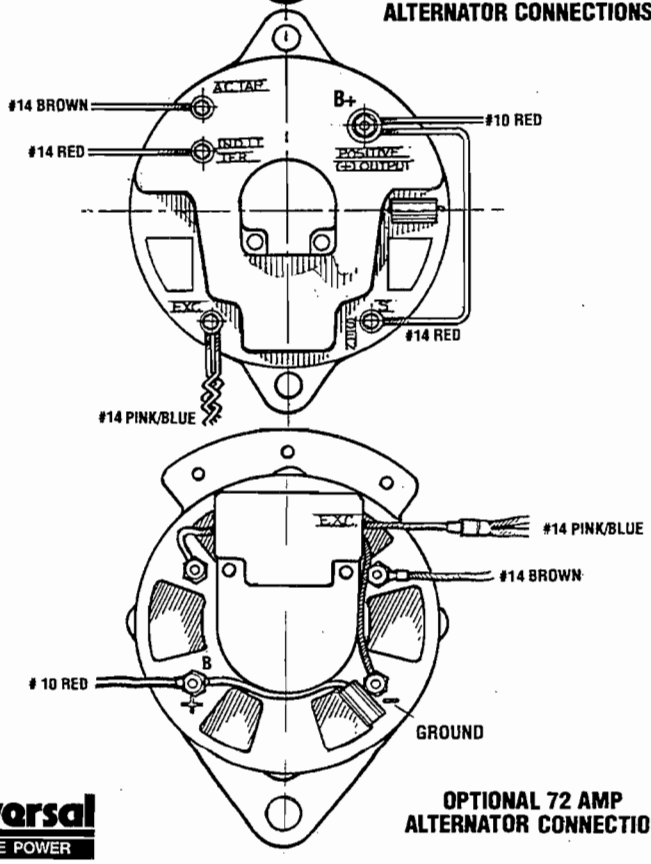

OPTIONAL 72 AMP ALTERNATOR CONNECTIONS

DC ELECTRICAL SYSTEM WIRING DIAGRAM #39144

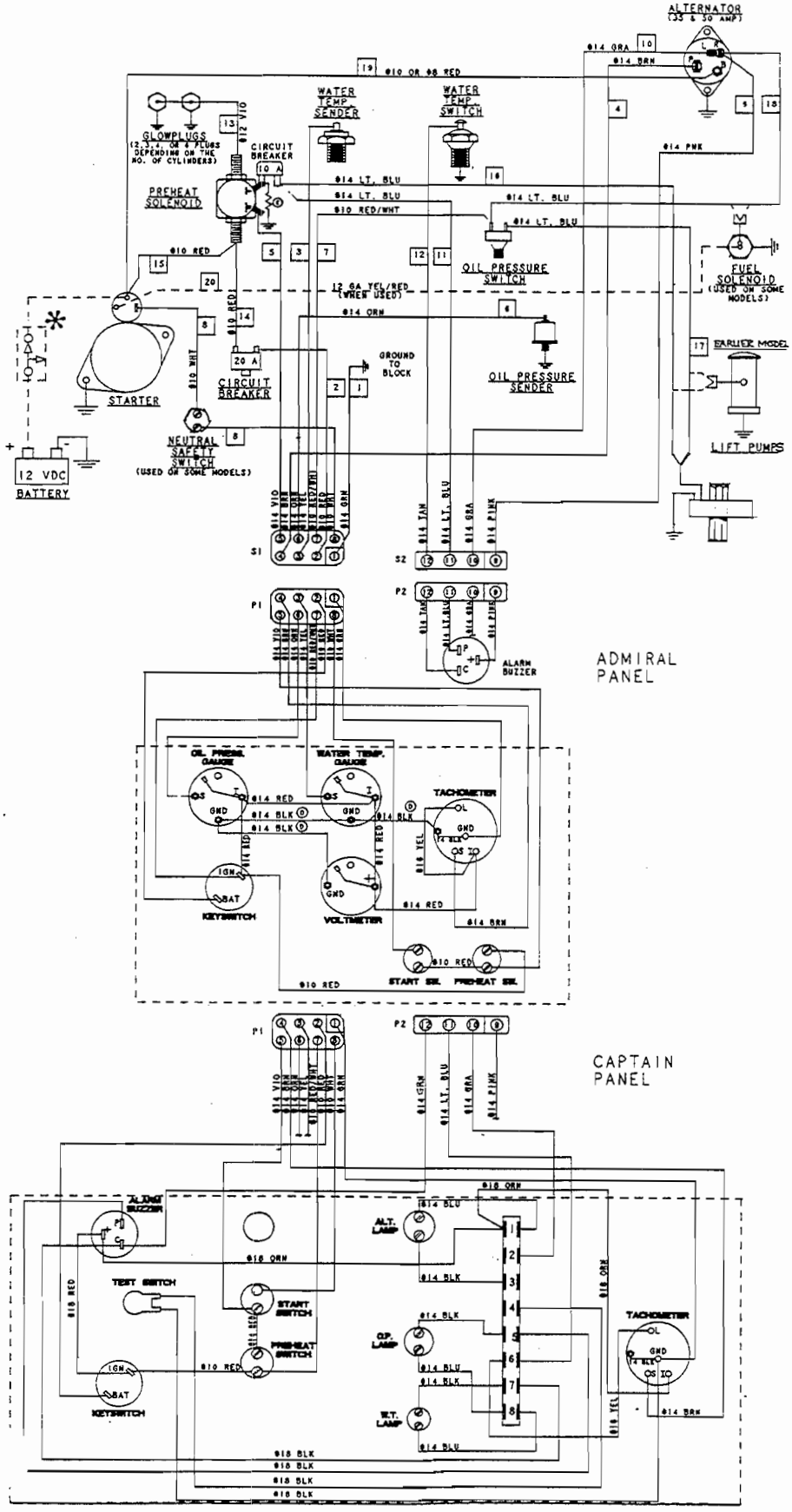

These diagrams illustrate the 12 volt negative ground electrical circuit. The two optional instrument panels, the CAPTAIN PANEL and the ADMIRAL PANEL are diagramed below.

When an ADMIRAL PANEL is installed, two additional instrument sendors are assembled to the engine to provide data for the panel gauges (refer to the illustrations below).

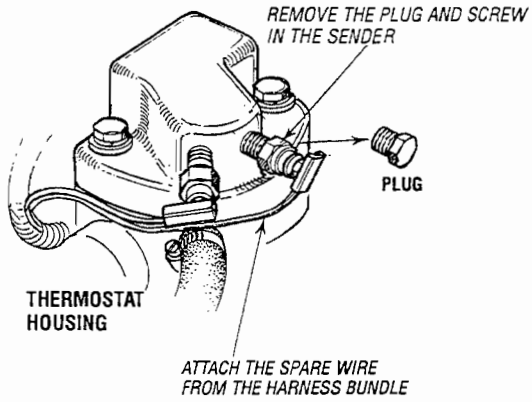

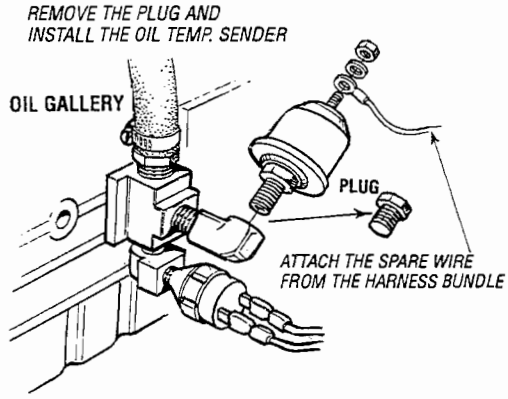

✳ **NOTE:** *An on-off switch should be installed in this circuit to disconnect the starter from the battery in an emergency and when leaving the boat. Twelve volt diesel engine starters typically draw 200 to 300 amps when cranking. A switch with a continuous rating of 175 amps at 12 VDC will normally serve this function, but a switch must never be used to "make" the starter circuit.*

DC ELECTRICAL SYSTEM WIRING SCHEMATIC #39144

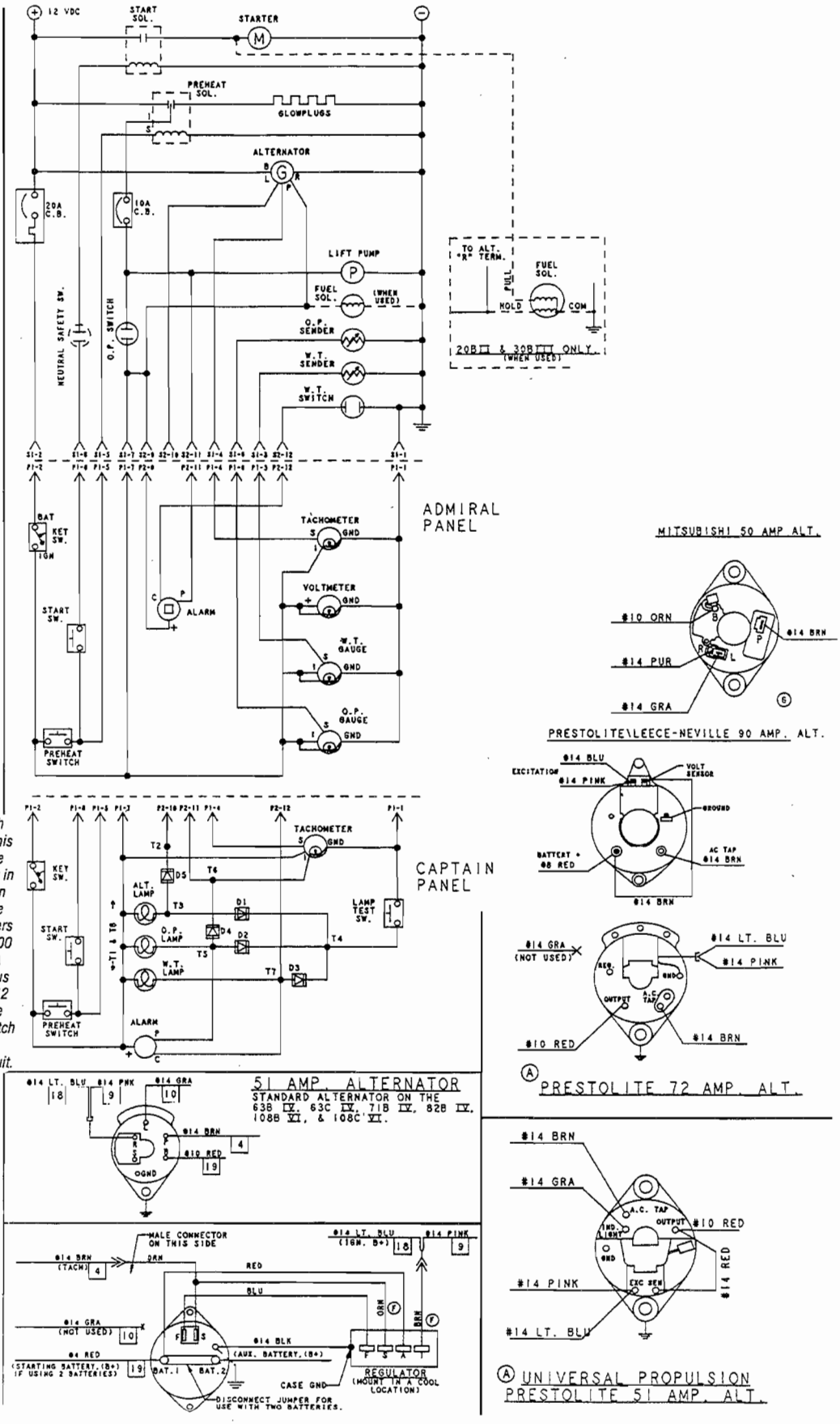

NOTE: *An on-off switch should be installed in this circuit to disconnect the starter from the battery in an emergency and when leaving the boat. Twelve volt diesel engine starters typically draw 200 to 300 amps when cranking. A switch with a continuous rating of 175 amps at 12 VDC will normally serve this function, but a switch must never be used to "make" the starter circuit.*

WIRING DIAGRAM CATALINA YACHTS #200360

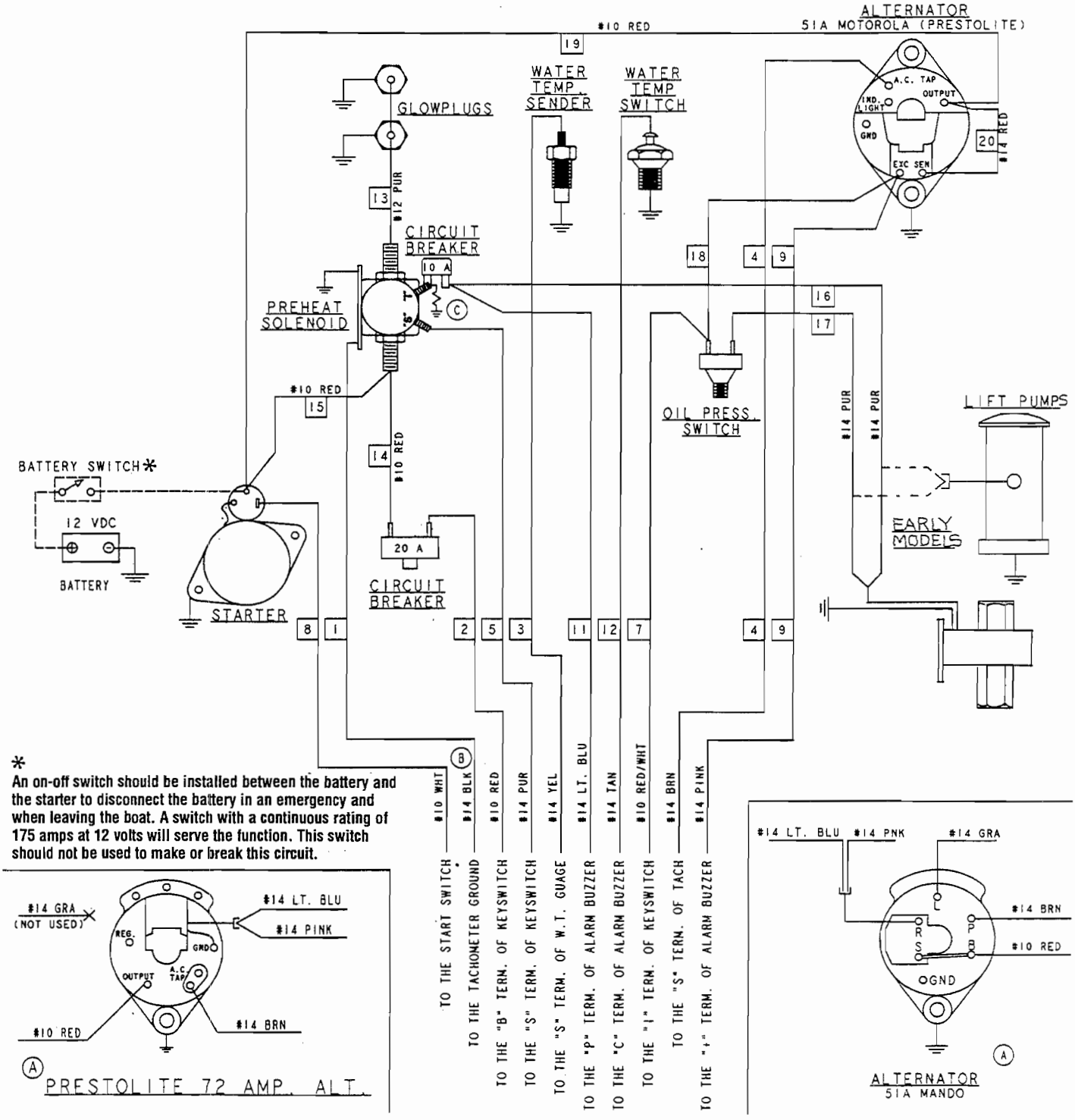

*
An on-off switch should be installed between the battery and the starter to disconnect the battery in an emergency and when leaving the boat. A switch with a continuous rating of 175 amps at 12 volts will serve the function. This switch should not be used to make or break this circuit.

WIRING SCHEMATIC CATALINA YACHTS #200360

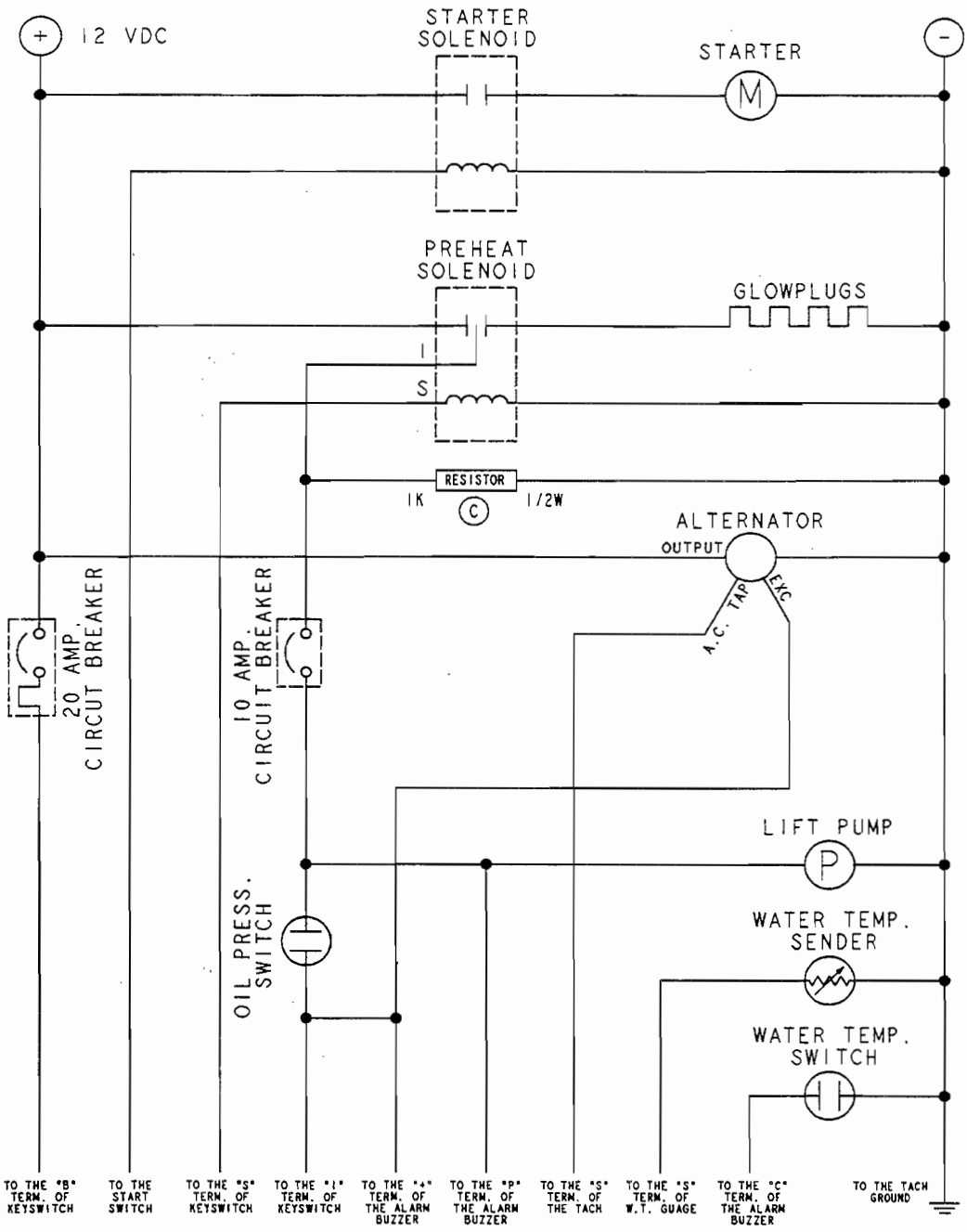

ENGINE ADJUSTMENTS

NOTE: *UNIVERSAL recommends that the following engine adjustments be performed by a competent engine mechanic. The information below is provided to assist the mechanic.*

THROTTLE AND STOP CONTROLS

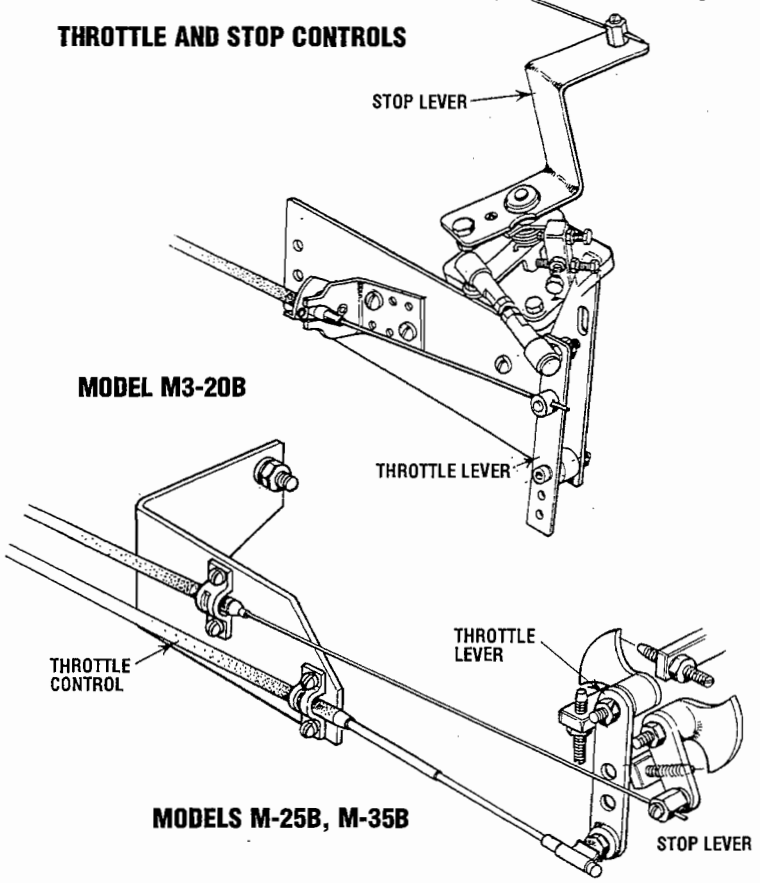

THROTTLE AND STOP ASSEMBLY

The throttle and engine stop levers are located on the outboard side of the engine just below the fuel injection pump. Brackets are provided for owner-installed push-pull cables that run to the steering station. The throttle high speed adjustment has been factory set and is wire locked. The throttle idle screw is adjustable. These levers and brackets should be periodically lubricated and checked for loose fastenings.

VALVE CLEARANCE

NOTE: Valve adjustment should not be necessary under normal operating conditions. These adjustments, when required, should be performed by an authorized mechanic.

Remove the valve rocker cover to expose the engine's valve train. Remove the glow plugs from each of the cylinders to enable the engine to be easily rotated by hand to position each cylinder for valve adjustment.

Valves are adjusted with the piston in the cylinder being adjusted at TDC (Top Dead Center) of its compression stroke. Each cylinder is adjusted following the engine's firing order.

FIRING ORDER	3 CYLINDER MODELS	1 - 2 - 3
	4 CYLINDER MODELS	1 - 3 - 4 - 2

Adjust the valves beginning with Cylinder #1. Rotate the crankshaft slowly and observe the operation of the valves for Cylinder #1. Watch for the intake valve to open indicating the piston is on its intake stroke (the piston is moving down in the cylinder). Continue to rotate the crankshaft slowly and look for the intake valve to close. The piston is now starting its compression stroke (the piston is moving up in the cylinder towards TDC).

Watch the timing hole in the bell housing for timing numbers to appear. Position the ITC Mark in alignment with the notch in the timing hole. The piston in Cylinder #1 is now at TDC. Adjust the valves in Cylinder #1. Proceed to the next cylinder in the firing order.

Three Cylinder Models

Rotate the crankshaft 240° in the normal direction of rotation and adjust the #3 Cylinder's valves. Rotate the crankshaft another 240° and adjust the #2 Cylinder's valves.

Four Cylinder Models

Rotate the crankshaft 180° in the normal direction of rotation and adjust the #3 Cylinder's valves. Rotate the crankshaft another 180° and adjust the #4 Cylinder's valves. Rotate the crankshaft another 180° and adjust the #2 Cylinder's valves.

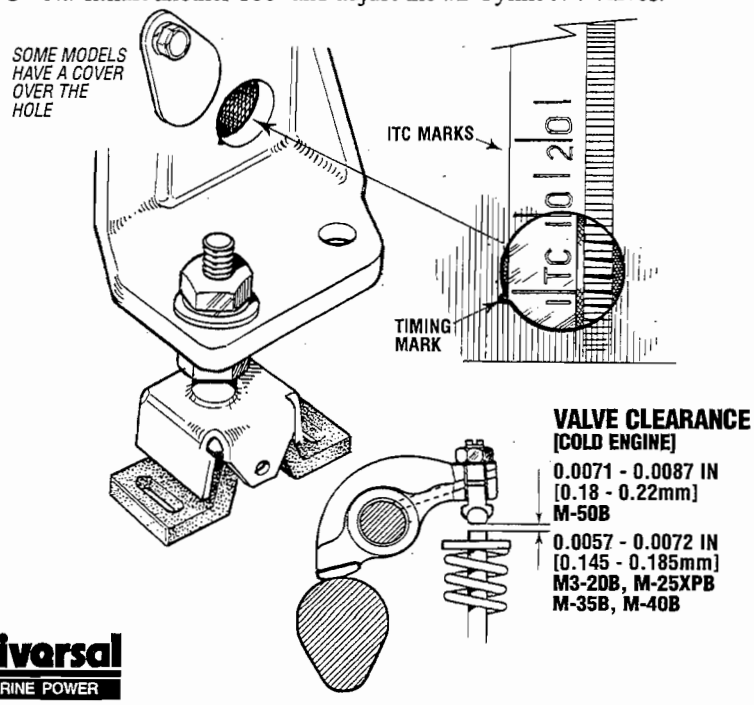

ENGINE ADJUSTMENTS

NOTE: *UNIVERSAL recommends that the following engine adjustments be performed by a competent engine mechanic. The information below is provided to assist the mechanic.*

TESTING ENGINE COMPRESSION

Make certain the oil level (dipstick) is at the correct level and the air intake filter is clean. The battery and starter motor must also be in good condition.

1. Warm the engine to normal operating temperature.
2. Move the control lever to a position for shutting off the fuel. (Disconnect the wires if a fuel shutdown solenoid is used).
3. Remove all the glow plugs from the engine and install the compression gauge/adapter combination to the cylinder on which the compression is to be measured.

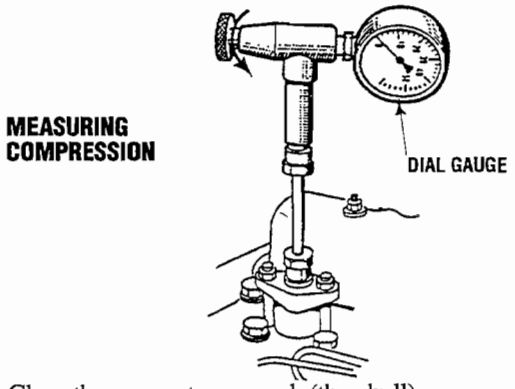

4. Close the raw water seacock (thru-hull).
5. Crank the engine and allow the gauge to reach a maximum reading. Record the reading.
6. Repeat this process for each cylinder.

   COMPRESSION PRESSURE 412 - 469 psi [2.84 - 3.23 MPa] at cranking speed.

   MAXIMUM PERMISSIBLE DIFFERENCE BETWEEN CYLINDERS IS 10% OR LESS. LIMIT 327 psi [2.25 MPa]

NOTE: *If the readings are below the limit, the engine needs an overhaul.*

7. Re-install the glow plugs (use anti-seize compound on the threads) and reset the fuel shut-off to the run position.
8. **Open the raw water seacock (thru-hull).**

OIL PRESSURE

The engine's oil pressure, during operation, is indicated by the oil pressure gauge on the instrument panel. During normal operation, the oil pressure will range between 40 and 60 psi (2.8 and 4.2 kg/cm²).

NOTE: *A newly started, cold engine can have an oil pressure reading up to 60 psi (4.2 kg/cm²). A warmed engine can have an oil pressure reading as low as 35 psi (2.5 kg/cm²). These readings will vary depending upon the temperature of the engine and the rpms.*

Low Oil Pressure

The specified safe minimum oil pressure is 5 - 10 psi. A gradual loss of oil pressure usually indicates a worn bearings. For additional information on low oil pressure readings, see the *ENGINE TROUBLESHOOTING* chart.

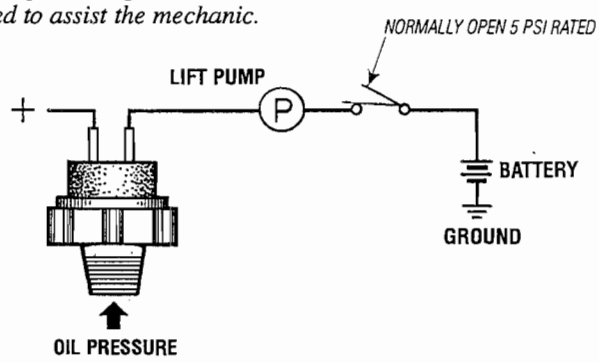

Testing Oil Pressure

To test the oil pressure, remove the oil pressure sender, then install a mechanical oil pressure gauge in its place. After warming up the engine, set the engine speed at idle and read the oil pressure gauge.

OIL PRESSURE 7 psi [49 KPa] at idle speed.
SENDER AND SWITCH TORQUE 9 - 13 ft-lb (1.2 - 1.8 m - kg).

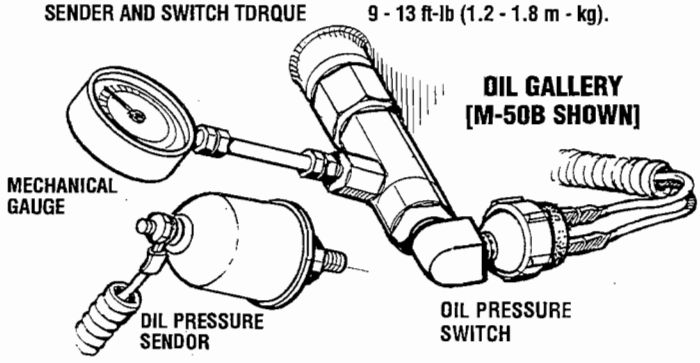

FUEL INJECTORS

In case of severe vibrations and detonation noise, have the injectors checked and overhauled by an authorized fuel injection service center. Poor fuel quality, contaminants and loss of positive fuel pressure to the injection pump can result in injector faults. Since fuel injectors must be serviced in a clean room enviroment, it is best to carry at least one extra injector as a spare should a problem occur.

Before removing the old injector, clean the area around the base of the injector to help prevent any rust or debris from falling down into the injector hole. If the injector will not lift out easily and is held in by carbon build-up or the like, work the injector side-to-side with the aid of the socket wrench to free it, and then lift it out.

The injector seats in the cylinder head on a copper sealing washer. This washer should be removed with the injector, replace with a new washer when the new injector is installed.

INJECTOR TO CYLINDER HEAD TORQUE 40 ± 4 ft-lb (5.5 ± 0.5 kgf-m)

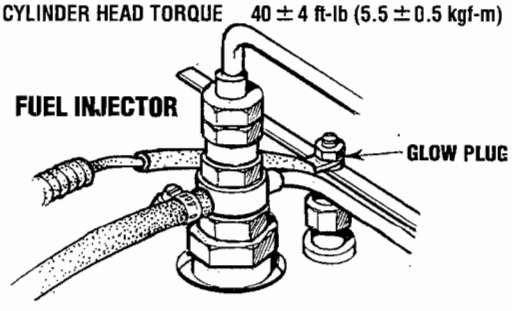

ENGINE TROUBLESHOOTING

The following trouble shooting chart describes certain problems, the probable causes of the problems, and the recommendations to overcome the problems.

NOTE: *The engine's electrical system is protected by a 20-Ampere manual reset circuit breaker located on the bracket on the left side of the engine. The preheat solenoid is mounted on the same bracket.*

Problem	Probable Cause	Verification/Remedy
Key switch on, PREHEAT switch depressed: no panel indications; fuel solenoid or electrical fuel pump	1. Battery Switch not on.	1. Check switch and/or battery connections.
	2. 20-Amp circuit breaker tripped.	2. Reset breaker; if breaker trips again, check preheat solenoid circuit and check circuit for shorts to ground.
	3. 10-Amp breaker tripped.	3. Check voltage at and after breaker.
	4. Loose battery connections.	4. Check (+) connection to starter solenoid and (-) connection to engine ground stud. Check battery cable connections.
	5. Preheat solenoid not operating.	5. Check solenoid.
Key switch on, PREHEAT switch depressed: START switch depressed; no starter engagement.	1. Connection to solenoid faulty.	1. Check connection at solenoid.
	2. Faulty START switch.	2. Check switch with ohmmeter.
	3. Faulty solenoid.	3. Check that 12 volts are present at starter solenoid activation connection.
	4. Loose battery connections.	4. Check (+) connection to starter solenoid and (-) connection to engine ground stud. Check battery cable connections.
	5. Low batteries.	5. Check battery charge state.
Engine cranks, but does not start.	1. Faulty fueling system.	1. Check that fuel valves are open.
	2. Preheat solenoid faulty.	2. Check solenoid.
	3. Low compression.	3. Compression test the engine.
Engine can't be stopped.	1. Faulty shut-off lever at engine.	1. Reconnect shut off lever
	2. Push-pull shut-off cable from steering station to engine disconnected.	2. Reconnect push-pull cable.
Engine stops.	1. Fuel lift pump failure.	1. Fuel lift pump should make a distinct ticking sound. Replace pump with spare.
	2. Switches and/or wiring loose or disconnected.	2. Inspect wiring for short circuits and loose connections. Inspect switches for proper operation.
	3. Fuel starvation.	3. Check fuel supply, fuel valves, fuel lift pump.
	4. 20 Amp circuit breaker tripping.	4. Check for high DC amperage draw during operation. Ensure breaker is not overly sensitive to heat which would cause tripping.
	5. Exhaust system is restricted.	5. Check for blockage, collapsed hose, carbon buildup at exhaust elbow.
	6. Water in fuel.	6. Pump water from fuel tank(s); change filters and bleed fuel system.
Battery not charging	1. Alternator drive.	1. Check drive belt tension. Aternator should turn freely. Check for loose connections. Check output with voltmeter. Ensure 12 volts are present at the Exc terminal.

ENGINE TROUBLESHOOTING

Problem	Probable Cause	Verification/Remedy
Battery runs down.	1. Oil Pressure switch.	1. Observe if gauges and panel lights are activated when engine is not running. Test the oil pressure switch.
	2. High resistance leak to ground.	2. Check wiring. Insert sensitive (0 - .25 amp)meter in battery lines. (Do not start engine.) Remove connections and replace after short is located.
	3. Low resistance leak.	3. Check all wires for temperature rise to locate the fault.
	4. Alternator.	4. Disconnect alternator at output, after a good battery charging. If leakage stops, remove alternator and bench test. Repair or replace.
	5. Poor battery connections.	5. Check cable connections at battery.
Engine overheats.	1. Raw water not circulating.	1. Broken or loose belt at raw water pump.
NOTE: Shut engine down immediately.	2. Coolant not circulating.	2. Raw water pump failure. Check impeller — replace.
		2a. Obstruction at raw water intake or raw water filter.
		2b. Thermostat — remove and test in hot water. Replace thermostat.
		2c. Loss of coolant — check hoses, hose clamps, drain plug, etc. for leaks.
		2d. Broken or loose belts — tighten/replace.
		2e. Air leak in system; run engine and open cooling system petcocks, heat exchanger, manifold, etc. to bleed air. Add coolant as needed.
Exhaust smoking problems	1. Blue smoke.	1. Incorrect grade of engine oil.
		1a. Crankcase is overfilled with engine oil (oil is blowing out through the exhaust).
	2. White smoke.	2. Engine is running cold.
		2a. Faulty injector or incorrect injector timing.
	3. Black or gray smoke.	3. Improper grade of fuel.
		3a. Fuel burn incomplete due to high back pressure in exhaust or insufficient air for proper combustion (Check for restrictions in exhaust system; check air intake).
		3b. Improperly timed fuel system, misadjusted valves or poor compression.
		3c. Lack of air – check air intake and air filter. Check for proper ventilation.
		3d. Overload.
		3e. Propeller.
Transmission will not shift in or out of gear, or drive the vessel.	1. Transmission failure.	**1a.** Check cable connections at steering station and at transmission lever.
		1b. Check transmission fluid.
		1c. Check shaft couplings or engine damper plate.
		1d. Check engine's damper plate.
Excessive vibration	1. Faulty engine alignment	1. Check the shaft/transmission coupling.
		1a. Inspect all engine mounts.
	2. Cutless bearings, support strut and propeller could all be suspect.	2. Inspect propeller and shaft.

CONTROL PANEL TROUBLESHOOTING
MANUAL STARTER DISCONNECT (TOGGLE SWITCHES)

NOTE: *The engine control system is protected by a 20 amp manual reset circuit breaker located on the engine as close as possible to the power source.*

Problem	Probable Cause	Verification/Remedy
PREHEAT depressed, no panel indications fuel solenoid, electric fuel pump and preheat solenoid not energized.	1. Oil Pressure switch. 2. 20 amp circuit breaker tripped.	1. Check switches and/or battery connections. 2. Reset breaker. If opens again, check preheat solenoid circuit and run circuit for shorts to ground.
START SWITCH DEPRESSED, no starter engagement.	1. Connection to solenoid faulty. 2. Faulty switch 3. Faulty solenoid. 4. Loose battery connections. 5. Low battery.	1. Check connection. 2. Check switch with ohmmeter. 3. Check that 12 volts are present at the solenoid connection. 4. Check battery connections. 5. Check battery charge state.
NO IGNITION, cranks, does not start.	1. Faulty fueling system. 2. Check for air in the fuel system. 3. Faulty fuel lift pump.	1. Check for fuel. 2. Allow system to bleed. 3. Replace fuel lift pump.
NOT CHARGING BATTERY	1. Faulty alternator drive.	1. Check the drive belt and its tension. Be sure the alternator turns freely. Check for loose connections. Check the output with a voltmeter. Ensure 12V are present at the regulator terminal.
BATTERY RUNS DOWN	1. Oil pressure switch. 2. High resistance leak to ground. 3. Low resistance leak to ground. 4. Faulty alternator.	1. Observe if the gauges and panel lights are activated when the engine is not running. Test the oil pressure switch. 2. Check the wiring. Insert sensitive (0-.25 amp) meter in battery lines (Do NOT start engine). Remove connections and replace after short is located. 3. Check all wires for temperature rise to locate the fault. 4. After a good battery charging, disconnect alternator at output. If leakage stops. Remove alternator and bench test. Repair or replace.

TROUBLESHOOTING WATER TEMPERATURE AND OIL PRESSURE GAUGES

If the gauge reading is other than what is normally indicated by the gauge when the instrument panel is energized, the first step is to check for 12 volts DC between the ignition (B+) and the Negative (B-) terminals of the gauge.

Assuming that there is 12 volts as required, leave the instrument panel energized (key switch on) and perform the following steps:

1. Disconnect the sender wire at the gauge and see if the gauge reads zero, which is the normal reading for this situation.

2. Connect the sender terminal at the gauge to ground and see if the gauge reads full scale, which is the normal reading for this situation.

If both of the above gauge tests are positive, the gauge is undoubtedly OK and the problem lies either with the conductor from the sender to the gauge or with the sender.

If either of the above gauge tests are negative, the gauge is probably defective and should be replaced.

Assuming the gauge is OK, check the conductor from the sender to the sender terminal at the gauge for continuity.

Check that the engine block is connected to the ground. Some starters have isolated ground terminals and if the battery is connected to the starter (both plus and minus terminals), the ground side will not necessarily be connected to the block.

TACHOMETER/HOUR METER

The tachometer/hour meter used in propulsion engine instrument panels contains two separate electrical circuits with a common ground. One circuit operates the hour meter and the other the tachometer. The hour meter circuit operates on 12 volts alternator charging voltage supplied to the (+) terminal on the back of the instrument.

The tachometer circuit operates on AC voltage 6-8 volts, fed from one of the diodes in the alternator and supplied to the tachometer input terminal while the engine is running, and the alternator producing battery charging voltage 13.0-14.8 volts DC.

The following are procedures to follow when troubleshooting a fault in either of the two circuits in a tachometer/hour meter.

Hour meter Inoperative

Check for the proper DC voltage between (+) and (-) terminals.

1. Voltage present - meter is defective - repair or replace.
2. Voltage not present - trace (+) and (-) electrical connections for fault. (Jump 12 volts DC to meter (+) terminal to verify the operation.)

Tachometer Inoperative

Check for the proper AC voltage between tachometer input terminal and (-) terminal with the engine running.

1. Voltage present - attempt adjusting meter through calibration access hole. No results, repair or replace meter.
2. AC voltage not present - check for proper alternator DC output voltage.
3. Check for AC voltage at tach terminal on alternator to ground.
4. Check electrical connections from tachometer input terminal to alternator connection.

Tachometer Sticking

1. Check for proper AC voltage between "tach inp." terminal and (-) terminal.
2. Check for good ground connection between meter (-) terminal and alternator.
3. Check that alternator is well grounded to engine block at alternator pivot bolt.

Tachometer Inaccurate

a. With a hand-held tach on the front of the crankshaft pulley retaining nut or with a strobe-type tach, read the front crankshaft pulley rpm at idle.

b. Adjust the tachometer with a small Phillips type screwdriver through the calibration access hole in the rear of the tachometer. Zero the tach and bring it to the rpm indicated by the strobe or hand tach. (Verify the rpm at idle and at high speed). (Adjust the tach as needed.)

NOTE: *Current model tachometers use a coarse adjustment dial to set the tachometer to the crankshaft pulley rpms. The calibrating screw is then used for fine tuning.*

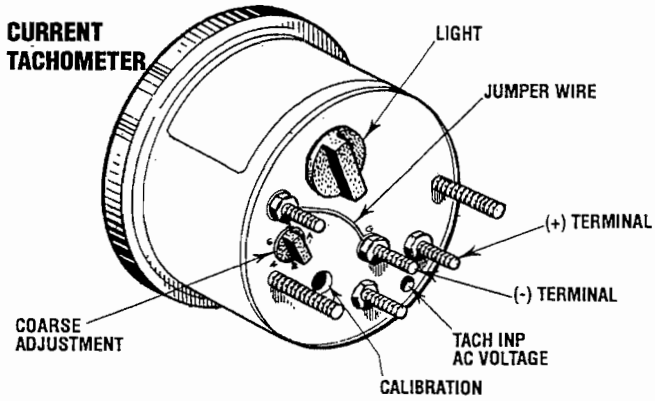

IDLE SPEED ADJUSTMENT & TACHOMETER CHECK (New Installation)

Checking the idle speed

NOTE: *In a new installation having new instrument panels, the tachometer may not always be correctly calibrated to the engine's rpm. This calibration should be checked in all new installations.*

1. Warm up the engine to normal operating temperature. Remove any specks on the crankshaft pulley with a clean cloth and place a piece of suitable reflecting tape on the pulley to facilitate use of a photoelectric type tachometer.
2. Start and idle the engine.
3. Aim the light of the tachometer onto the reflecting tape to confirm the engine speed. Check the instrument panel tachometer reading. Adjust the tachometer in the panel by using the instrument coarse adjustment to calibrate the instrument reading to the closest R.P.M. that the photo tach is showing. Then use the fine calibration adjustment to bring the instrument to the exact reading as the photo tach.
4. Adjust the idle speed if the engine speed is not within the specified value.
   NORMAL IDLE SPEED: 800 - 1000 rpm.

WATER HEATER CONNECTIONS

WATER HEATER INSTALLATIONS

This engine is equipped with connections for the plumbing of engine coolant to heat an on-board water heater. The water heater should be mounted in a convenient location either in a high or low position in relation to the engine, so that the connecting hoses from the heater to the engine can run in a reasonably direct line without any loops which might trap air.

Hoses should rise continuously from their low point at the heater to the engine so that air will rise naturally from the heater to the engine. If trapped air is able to rise to the heater, then an air bleed petcock must be installed at the higher fitting on the heater for bleeding air while filling the system.

NOTE: *If any portion of the heating circuit rises above the engine's closed cooling system pressure cap, then a pressurized (aluminum) remote expansion tank (Kit #024177) must be installed in the circuit to become the highest point. Tee the remote expansion tank into the heater circuit, choosing the higher of the two connections for the return. Tee at the heater, and plumb a single line up to the tank's location and the other back to the engine's return. Install the remote expansion tank in a convenient location so the fresh water coolant level can easily be checked. The remote expansion tank will now serve as a check and system fill point. The plastic coolant recovery tank is not used when the remote expansion tank kit is installed, since this tank serves the same function.*

HEATER ABOVE THE ENGINE

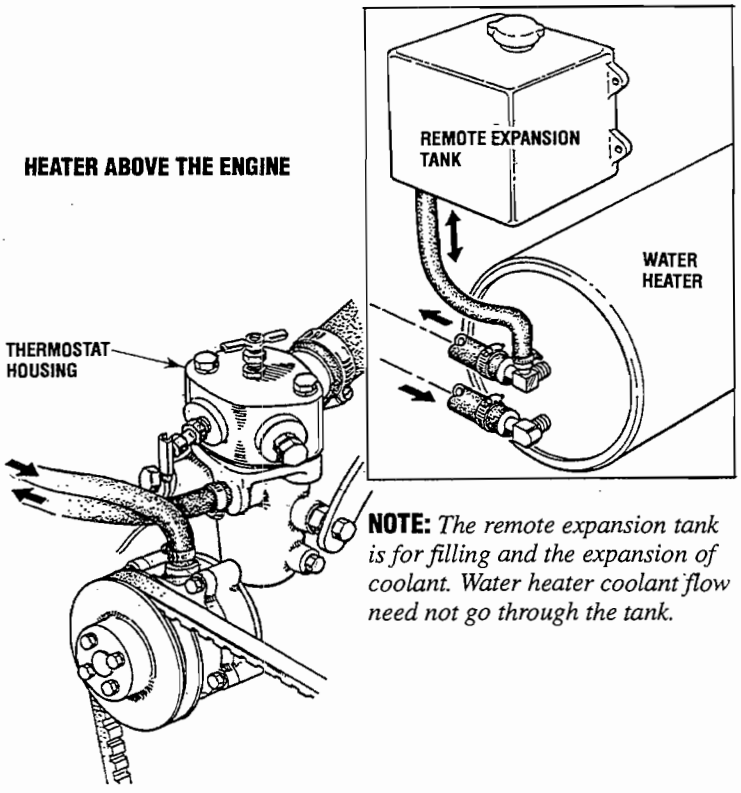

NOTE: *The remote expansion tank is for filling and the expansion of coolant. Water heater coolant flow need not go through the tank.*

The pressure cap on the engine's manifold should be installed after the engine's cooling system is filled with coolant. Finish filling the cooling system from the remote tank after the system is filled and is free of air and exhibits good coolant circulation. During engine operation, checking the engine's coolant should be done at the remote tank and not at the engine manifold cap. The hose connection from the heater to the remote expansion tank should be routed and supported so it rises continuously from the heater to the tank, enabling any air in the system to rise up to the tank and out of the system.

NOTE: *Air bleed petcocks are located on the engine's heat exchanger and on the thermostat housing. Open these petcocks when filling the engine's fresh water system to allow air in the coolant circuit to escape. Close tightly after all the air is removed.*

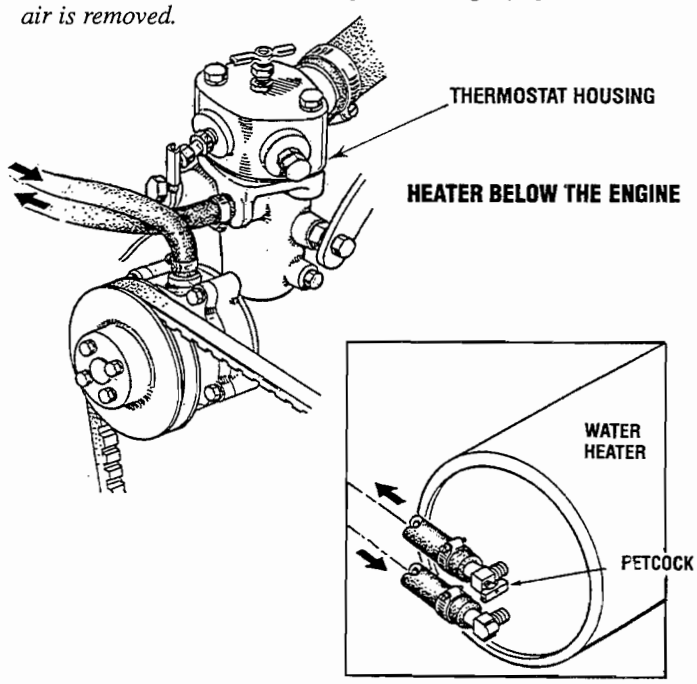

HOSE CONNECTIONS

The hose adapters (nipples) coming off the engine (thermostat housing and water pump housing) are sized for 3/8" I.D. hose. An adapter is available (#302391) that will increase the size to 5/8" I.D. hose.



ADAPTER PN 302391

HURTH HBW TRANSMISSIONS

DESCRIPTION

The information below is specific to the HBW Transmissions, the *TRANSMISSION TROUBLESHOOTING SECTION* applies to all models.

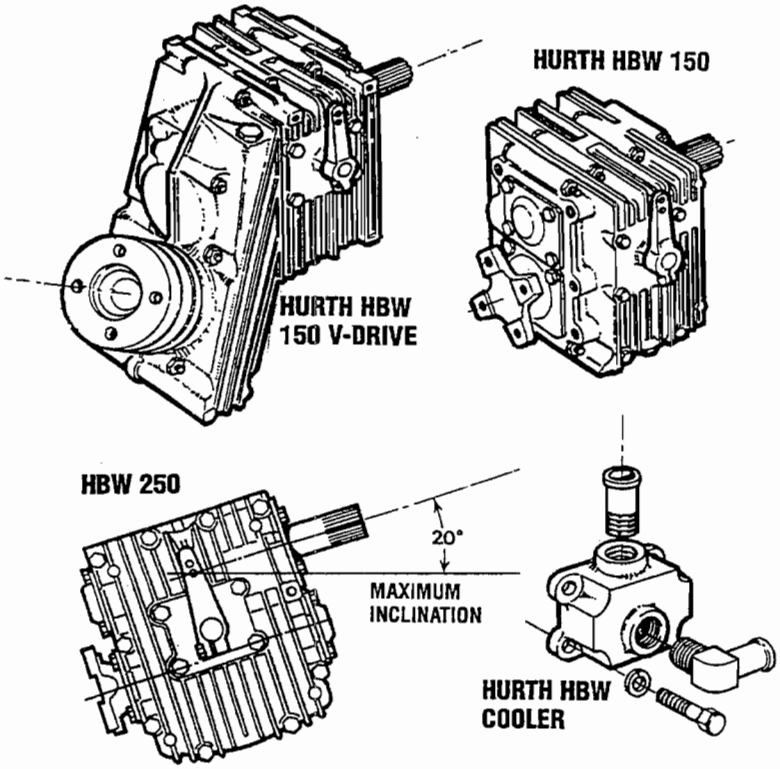

⚠ CAUTION: ***The position of the mechanism behind the actuating lever is factory-adjusted to ensure equal shift lever travel from neutral position A and B. If this mechanism is in any way tampered with, the transmission warranty will be void.***

SHAFT COUPLINGS

WESTERBEKE recommends a flexible connection between the transmission and the propeller shaft if the engine is flexibly mounted, in order to compensate for angular deflections. The installation of a special propeller thrust bearing is not required, since the propeller thrust will be absorbed by the transmission bearing, provided the value specified under *SPECIFICATIONS* is not exceeded. However, the output shaft should be protected from additional loads. Special care should be taken to prevent torsional vibration. When using a universal joint shaft, make certain to observe the manufacturers instructions.

Even with the engine solidly mounted, the use of flexible coupling or "DRIVESAVER" will reduce stress in the gearbox bearings caused by hull distortions, especially in wooden boats or where the distance between transmission output flange and stern gland is less than about 800mm.

"Drivesaver" is a product of Globe Marine Rockland, MA.

NOTE: *When installing the transmission, make certain that shifting is not impeded by restricted movability of the cable or rod linkage, by unsuitably positioned guide sheaves, too small a bending radius or other restrictions. In order to mount a support for shift control cable connections, use the two threaded holes located above the cable bracket mounted on the gear housing. Refer to the WESTERBEKE parts list.*

SHIFT LEVER

The transmission is suitable for single lever remote control. Upon loosening the retaining screw, the actuating lever can be moved to any position required for the control elements (cable or rod linkage). Make certain that the shift lever does not contact the actuating lever cover plate: the minimum distance between lever and cover should be 0.5mm.

The control cable or rod should be arranged at right angle to the actuating shift lever when in the neutral position. The neutral position of the operating lever on the control console should coincide with the neutral position of this lever.

The shifting travel, as measured at the pivot point of the actuating lever, between the neutral position and end positions **A** and **B** should be at least **35mm** for the outer and **30mm** for the inner pivot point.

A greater amount of shift lever travel is in no way detrimental and is recommended. However, if the lever travel is shorter, proper clutch engagement might be impeded which, in turn, would mean premature wear, excessive heat generation and clutch plate failure. This would be indicated by slow clutch engagement or no engagement at all.

NOTE *Check for proper lever travel at least each season.*

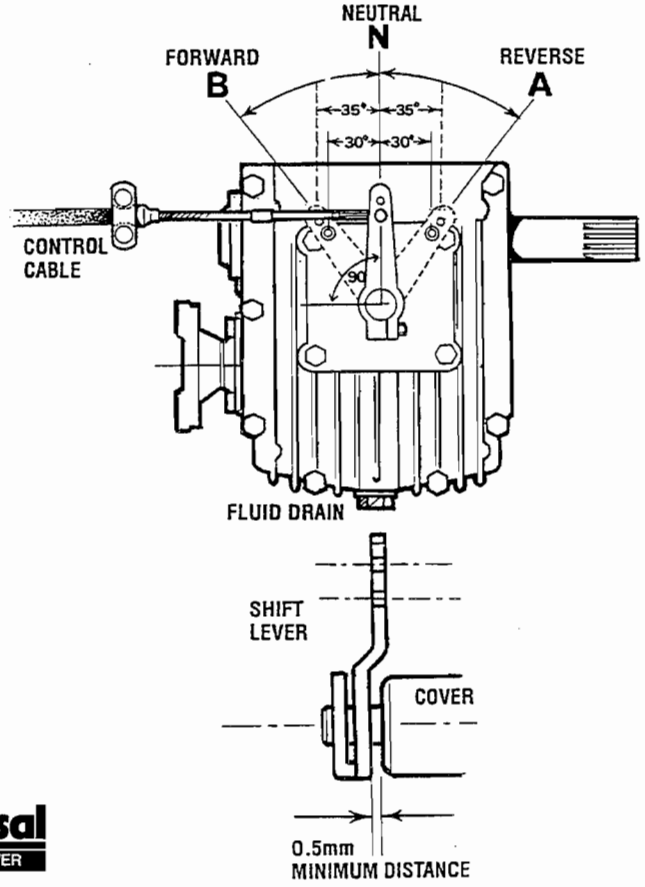

HURTH HBW TRANSMISSIONS

INITIAL OPERATION

All HBW marine transmissions are test-run on a test stand with the engine at the factory prior to delivery. For safety reasons the fluid is drained before shipment.

Fill the gearbox with Automatic Transmission Fluid (DEXTRON III). The fluid level should be up to the index mark on the dipstick. To check the fluid level, just insert the dipstick, do not screw it in. Screw the dipstick into the case after the fluid level is checked and tighten. Do not forget the sealing ring under the hexhead of the dipstick. Check for leaks and make a visual inspection of the coupling, oil cooler and hoses, and shift cables.

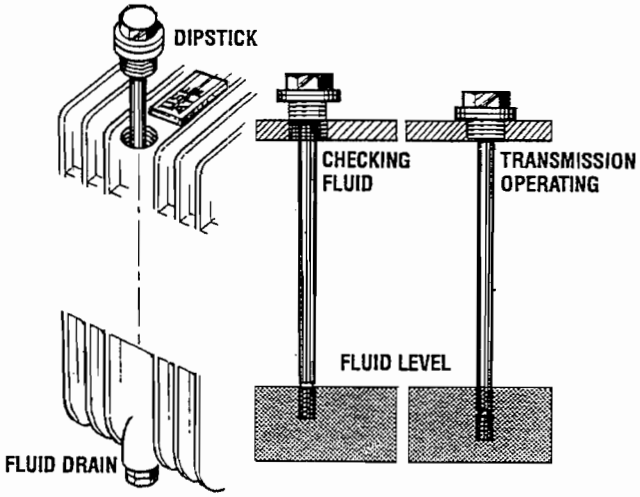

FLUID CHANGE

Change the fluid for the first time after about 25 hours of operation, then every 250 operating hours or at least once a year or when you change engine oil.

Removing the fluid

Push a suction pump hose down through the dipstick hole to the bottom of the housing and suck out the fluid. If space allows, use the transmission drain. Remove the drain plug from the bottom of the transmission and allow the fluid to drain into a container, then reinstall the plug with its sealing washer. Wipe down the transmission and properly dispose of the used fluid. After running the engine, shut down and recheck the fluid level.

DRAIN PLUG TORQUE 20 - 25 ft/lbs

NOTE : *When changing the fluid, take care not to lose the drain plug sealing washer. The drain plug will leak without this sealing washer.*

> ⚠ **WARNING:** ***Never pull out the dipstick while the engine is running. Hot fluid will splash from the dipstick hole. This could cause severe burns.***

LOCKING THE PROPELLER

Locking of the propeller shaft by an additional brake is not required: use the gear shift lever position opposite your direction of travel for this purpose. Never put the gear shift in the position corresponding to the direction of travel of the boat.

WHEN UNDER SAIL OR BEING TOWED

Rotation of the propeller without load, such as when the boat is being sailed, being towed, or anchored in a river, as well as operation of the engine with the propeller stopped (for charging the battery), will have no detrimental effects on the transmission.

DAILY OPERATION

- ☐ Check the transmission fluid.
- ☐ Visually check the gear shift linkage and transmission.
- ☐ Start the engine in neutral, allowing a few minutes at idle to warm the fluid.
- ☐ Shift into gear.

NOTE : *Too low an idle speed will produce a chattering noise from the transmission gear and damper plate. In such cases the idle speed should be increased*

For additional information refer to the following text in this Transmission Section: *SHAFT COUPLINGS, MAINTENANCE AND TRANSMISSION TROUBLESHOOTING.*

HBW TRANSMISSIONS SPECIFICATIONS

General	(*Hurth Standard Transmission*) Case-hardened helical gears, with a servo-operated multiple disc clutch.
Gear ratio (optional)	2.63 : 1 (HBW 150A - 3R) 2.99 : 1 (HBW 150V - 3R) 2.74 : 1 (HBW 250 - 3R)
Propeller	See propeller recommendations.
Lubricating Fluid	*ATF - type A or Dextron - II or III*
Transmission Sump Capacity	HBW 150A 0.59 U.S. qts (0.561 liters) HBW 150V 1.11 U.S. qts (1.05 liters) HBW 250 0.75 U.S. qts. (0.79 liters)
Propeller Shaft Direction of Rotation	Right hand - standard transmission

OPERATING TEMPERATURE

> ⚠ **WARNING:** ***If the transmission fluid temperature is too high, stop the engine immediately and check the transmission fluid.***

Normal operating temperature of the transmission fluid should be in the range of 122°F (50°C) to 212°F (100°C). A maximum temperature of 266°F (130°C) may be only reached for a short time.

Make certain there is enough space around the transmission to provide good ventilation and cooling.

TRANSMISSION COOLER

Coolers are standard equipment for the HBW 100, 125, 150, 150A, 150V, and the 250 (no cooler is necessary for the HBW 35 and 50).

The cooler is a separate part of the transmission which prevents any possibility of coolant diluting the transmission fluid. However, the continued flow of coolant thru the cooler will, in time, erode the inside of the cooler causing external leaks.

A transmission cooler may last ten years or more but, in some circumstances, depending on operating hours, tropical waters, maintenance, etc. it might only last half that time.

UNIVERSAL recommends having a spare cooler aboard.

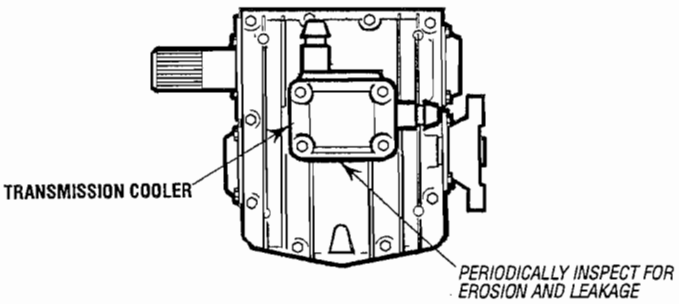

MAINTENANCE

Transmission maintenance is minimal. Keep the exterior housing clean, check the fluid level as part of your regular routine, and change the fluid every 300 operating hours.

Periodically inspect the transmission and the cooler for leaks and corrosion. Lubricate the cable connections.

Lay-up/Winterize

Storage requires special care. Follow these procedures:

- ☐ Drain water from the transmission oil cooler and replace with a proper mixture of antifreeze coolant.

  NOTE: *This operation will normally occur when the engine raw water cooling system is properly winterized.*

- ☐ Clean up the transmission and touch up unpainted areas (use heat resistant paint).
- ☐ Fill the transmission with *Dextron III ATF* fluid to prevent internal corrosion (extended storage only, twelve months or more).
- ☐ Loosen attaching hardware from the transmission output flange and propeller shaft coupling flange before removing the boat from the water. Separate the flanges and spray with lubricant.
- ☐ Inspect the gear shift cable, linkage, and attachments. Look for corrosion of the end fittings, cracks or cuts in the conduit, and bending of the actuator rods. Lubricate all moving parts.

  NOTE: *If the transmission is to be stored for a long time (twelve months or more), it should be topped off with fluid to prevent internal corrosion. Reduce the fluid level before putting the engine back into service.*

For additional information contact:

HURTH MARINE GEAR
ZF Industries
Marine US Headquarters
3131 SW 42nd Street
Fort Lauderdale, FL 33312
Tel.: (954) 581-4040
Fax: (954) 581-4077

TRANSMISSION TROUBLESHOOTING [HURTH]

CONTROL CABLES

The majority of transmission difficulties arise as a result of improper clutch adjustments (manual transmissions) or problems with control cables (hydraulic transmissions) rather than from problems with the transmission itself.

HURTH clutches, in particular, are very sensitive to improper shift adjustments.

If you experience operating problems with the transmission, shut the engine down. First check the transmission fluid level, then have a helper move the cockpit shift lever through the full range — from neutral to full forward, back to neutral, into full reverse, and back to neutral — while you observe the actuating lever on the transmission. If the remote is stiff to operate, break the cable loose at the transmission and try again. If it is still stiff, check the cable for kinks or excessively tight bends, and check any linkage for binding.

A new cable and perhaps a new linkage mechanism may be needed. While the cable is loose, shift the transmission in and out of gear using the lever on the side of the transmission to make sure there's no binding inside the case.

If the transmission passes these tests, crank the engine and have a helper put it in forward and reverse while you observe the propeller shaft; if the shaft isn't turning, the transmission needs professional attention. If it does turn but there's no thrust, check to see you still have a propeller on the end of the shaft or, if you have a folding or feathering propeller, that it isn't stuck in the "no pitch" position.

NOTE: *If you suspect a major problem in your transmission, immediately contact your UNIVERSAL dealer or an authorized marine transmission facility.*

Problem	Probable Cause	Verification/Remedy
Transmission gears cannot be shifted. Fails to move into gear.	1. Shifting lever is loose.	1. Tighten damping bolt on shifting lever.
	2. Shifting cable is broken, bent or unattached. Cable radius is to severe.	2. Check the cable, reattach or replace.
	3. Shift lever is binding against cover plate.	3. Detach the shift cable and operate the lever by hand. Clearance should be 0.02 in (0.5mm).
Transmission shifts into gear, but fails to propel the boat.	1. Output coupling is not turning.	1. Transmission needs professional attention.
	2. Propeller shaft is not turning. Output coupling is turning.	2. The coupling bolts are sheared or the coupling is slipping on the propeller shaft. Tighten or replace set screws, keys, pins and coupling bolts as necessary.
	3. Output coupling and propeller shaft are both turning.	3. Inspect the propeller; it may be missing or damaged. A folding propeller may be jammed. A variable pitch propeller may be in "no pitch" position.
Delay of gear engagement or engages. only after an increase in speed.	1. Lever travel **N** to **B** not equal to **N** to **A**. Refer to diagram.	1. Adjust cover plate until the lever is exact mid position.. Refer to *SHIFT LEVER TEXT AND DIAGRAM.*
	2. Shift lever travel is insufficient.	2. Check shift lever cable length. Refer to *SHIFT LEVER DIAGRAM.*
	3. Shift lever is binding against cover plate.	3. Check clearance, adjust if necessary.
Chattering transmission noise, mainly at low engine speed.	1. The engine or propeller generates torsional vibrations in the drive unit which produces a "chattering" noise in the transmission.	1. Mount a flexible coupling with another stiffness factor between the transmission coupling and the driveshaft. A higher stiffness factor might be sufficient.
		2. Inspect the damper plate between the engine and the transmission. Replace if necessary.
Transmission noise becomes louder.	1. Damage starting on flexible coupling due to wear or fatigue, possibly due to misalignment between engine and the drive shaft.	1. Check alignment, inspect flexible coupling. If noise persists, inspect the damper plate between the transmission and the engine. Replace if necessary.
	2. Beginning damage of bearings in transmission due to torsional vibrations, running without fluid, overload, wrong alignment of transmission, or excessive engine output.	2. Transmission needs professional attention.
Boat fails to attain specified max speed.	1. Operating temperature is high.	1. Wrong type of fluid, use ATF. Check fluid level.
	2. Operating without cooling.	2. Check cooler. Inspect coolant hoses and coolant flow.
Oil Leakage.	1. Corrosion at radial sealing ring and shaft. Damaged sealing ring.	1. Transmission needs professional attention.
	2. Misalignment of output flanges.	2. Check alignment. Must be within 0.003 in (0.08mm).

NOTE: *If you suspect a major problem in your transmission, immediately contact your UNIVERSAL dealer or an authorized marine transmission facility.*

LAY-UP AND RECOMMISSIONING

LAY-UP

Many owners rely on their boatyards to prepare their craft, including engines and generators, for lay-up during the off-season or for long periods of inactivity. Others prefer to accomplish lay-up preparation themselves.

The following procedures will allow you to perform your own lay-up and recommissioning, or you may use them as a check list for others. These procedures should afford your engine protection during a lay-up and also help familiarize you with the maintenance needs of your engine.

If you have any questions regarding lay-up procedures, call your local servicing dealer; he will be more than willing to provide assistance.

PROPELLER SHAFT COUPLING

The transmission and propeller half couplings should always be opened up and the bolts removed when the boat is hauled out of the water or moved from land to water, and during storage in a cradle. The flexibility of the boat often puts a severe strain on the propeller shaft or coupling, or both, while the boat is taken out or put in the water. In some cases, the shaft has actually been bent by these strains. This does not apply to small boats that are hauled out of the water when not in use, unless they have been dry for a considerable period of time.

FRESH WATER COOLING SYSTEM

A 50-50 solution of antifreeze and distilled water is recommended for use in the freshwater cooling system at all times. This solution may require a higher concentration of antifreeze, depending on the area's winter climate. Check the solution to make sure the antifreeze protection is adequate.

Should more antifreeze be needed, drain an appropriate amount from the engine block and add a more concentrated mixture. Operate the engine to ensure a complete circulation and mixture of the antifreeze concentration throughout the cooling system. Now recheck the antifreeze solution's strength.

LUBRICATION SYSTEM

With the engine warm, drain all the engine oil from the oil sump. Remove and replace the oil filter. (Place some paper towels and a plastic bag around the filter to catch the oil during its removal.)

When installing the new oil filter, be sure to apply a small amount of oil on the rubber sealing gasket at the base of the filter. Fill the sump with the correct amount of oil for your engine model. (Refer to the SPECIFICATIONS section of this manual.) Use an oil with an API specification of CF or CG4 or better. Run the engine and check for proper oil pressure and make sure there are not leaks. Stop the engine, check oil level and add oil as needed to bring level to dipstick full mark.

> ⚠ **CAUTION:** ***Do not leave the engine's old engine oil in the sump over the lay-up period. Engine oil and combustion deposits combine to produce harmful chemicals which can reduce the life of the engine's internal parts.***

FUEL SYSTEM

Top off your fuel tanks with No. 2 diesel fuel. Fuel additives should be added at this time to control algae, and a fuel conditioner such as STABIL. Care should be taken that the additives used are compatible with the primary filter/water separator used in the system. Change the element in your primary fuel filter/water separator, if the fuel system contains one, and clean the separator sediment bowl.

Change the fuel filter elements on the engine and bleed the system as needed. Start the engine and allow it to run for 5-10 minutes to make sure no air is left in the fuel system. Check for any leaks that may have been created in the fuel system during this servicing, correcting them as needed.

RAW WATER CIRCUIT

Close the through-hull fitting. Remove the raw water intake hose from the fitting. Place the end of this hose into a 5-gallon bucket of clean fresh water. Before starting the engine, check the zinc anode found in the heat exchanger on the engine and clean or replace it as required. Clean the raw water strainer, if one is installed in the inside of the hull.

Start the engine and allow the raw water pump to draw fresh water through the system. When the bucket is empty, stop the engine and refill the bucket with an antifreeze solution slightly stronger then needed for winter freeze protection in your area.

Start the engine again and allow all of this mixture to be drawn through the raw water system. Once the bucket is empty, stop the engine. This antifreeze mixture should protect the raw water circuit from freezing during the winter lay-up, as well as providing corrosion protection.

Remove the impeller from your raw water pump (some antifreeze mixture will accompany it, so catch it in a bucket). Examine the impeller. Acquire replacement, if needed, and a cover gasket. Do not replace the impeller (into the pump) until recommissioning, but replace the cover and gasket.

NOTE: *If engine storage is going to be a lengthy one, 12 months and beyond, it is wise to rotate the engine by hand two complete turns every additional 4 months to allow the injection pump components to move. This will help prevent their sticking during extended storage periods.*

LAY-UP AND RECOMMISSIONING

STARTER MOTOR

Lubrication and cleaning of the starter drive pinion is advisable, if access to the starter permits its removal. Make sure the battery connections are shut off before attempting to remove the starter. Take care in properly replacing any electrical connections removed from the starter.

CYLINDER LUBRICATION

It is not necessary to remove the glow plugs from the cylinder head to squirt light engine oil into the cylinders for the few months of normal lay-up. However, if you anticipate a longer lay-up period (12 months or more), we recommend that this procedure be performed. The light oil in the cylinders will prevent the pistons' rings from sticking to the cylinder walls. With oil in the cylinders, turn the engine over by hand two revolutions.

TRANSMISSION

Check or change fluid in the transmission as required. If the engine is to be layed up 12 months or more, fill the transmission to the very top to prevent corrosion. Lower the fluid to its normal level at recommissioning. Wipe off grime and grease and touch up unpainted areas. Protect coupling and output flange with anticorrosion coating.

SPARES

Lay-up time provides a good opportunity to inspect your UNIVERSAL engine to see if external items such as drive belts or coolant hoses need replacement. Check your basic spares kit and order items not on hand, or replace those items used during the lay-up, such as filters and zinc anodes.

BATTERIES

If batteries are to be left on board during the lay-up period, make sure they are fully charged and will remain that way, to prevent them from freezing. If you have any doubt that the batteries will not remain fully charged, or that they will be subjected to severe environmental conditions, remove the batteries and store them in a warmer, more compatible environment.

> ⚠ **WARNING:** ***Lead acid batteries emit hydrogen, a highly explosive gas, which can be ignited by electrical arcing or lighted tobacco products. Do not smoke or allow an open flame near the battery being serviced. Shut off all electrical equipment in the vicinity to prevent electrical arcing during servicing. Wear rubber gloves, a rubber apron and eye protection when servicing batteries.***

RECOMMISSIONING

The recommissioning of your UNIVERSAL engine after a seasonal lay-up generally follows the same procedures as those presented in the PREPARATIONS FOR STARTING section regarding preparation for starting and normal starts. However, some of the lay-up procedures will need to be counteracted before starting the engine.

1. Remove the oil-soaked cloths from the intake manifold
2. Remove the raw water pump cover and gasket. Discard the gasket. Install the raw water pump impeller removed during lay-up (or a replacement, if required). Install the raw water pump cover with a new cover gasket.
3. Reconnect the shaft coupling and check for proper alignment.
4. Reinstall the batteries that were removed during the lay-up, and reconnect the battery cables, making sure the terminals are clean and that the connections are tight. Check to make sure the batteries are fully charged.
5. Check the condition of the zinc anode in the raw water circuit and clean or replace the anode as needed. Note that it is not necessary to flush the antifreeze/freshwater solution from the raw water coolant system. When the engine is put into operation, the system will self-flush in a short period of time with no adverse affects.
6. Start the engine in accordance with procedures in the PREPARATIONS FOR INITIAL START-UP section of this manual.

UNIVERSAL MARINE ENGINES SPECIFICATIONS

GENERAL

Description **M-35B, M-40B,** **M-50B**	Diesel, four-cycle, four-cylinder, fresh water-cooled, Vertical, in-line overhead valve mechanism.
Description **M3-20B,** **M-25XPB**	Diesel, four-cycle, three-cylinder, fresh water-cooled, Vertical, in-line overhead valve mechanism.
Displacement	Cubic Inches [Liters]
M3-20B	43.8 [.7177]
M-25XPB	61.2 [1.000]
M-35B	81.47 [1.335]
M-40B	91.41 [1.498]
M-50B	113.32 [1.857]
Aspiration	Naturally aspirated
Combustion Chamber	Spherical type, three vortex system
Bore & Stroke	Inches [mm]
M3-20B	2.64 x 2.68 [67 x 68.0]
M-25XPB	2.99 x 2.90 [76 x 73.6]
M-35B	2.99 x 2.90 [76 x 73.6]
M-40B	2.09 x 3.09 [78 x 78.4]
M-50B	3.15 x 3.64 [80 x 92.4]
Compression Ratio	23:1
Firing Order	
M3-20B, M-25XPB	1 - 2 - 3
M-35B ,M-40B, M-50B	1 - 3 - 4 - 2
Weight	Lbs [Kg] with transmission
M3-20B	241 [110.0]
M-25XPB	295 [134.0]
M-35B	352 [159.0]
M-40B	356 [161.5]
M-50B	529 [240.0]
Direction of Rotation	Clockwise when viewed from the front

LUBRICATION SYSTEM

Description	Forced lubrication by gear pump
Lube Oil Filter	Full flow,spin on filter element
Lubrication Capacity	Quarts [Liters]
M3-20B, M-25XPB	4.0 [3.8]
M-35B	4.0 [3.8]
M-40B	4.5 [4.3]
M-50B	10.5 [9.9]
Operating Oil Pressure (engine hot)	42 - 64 psi (294 - 441Kpa) at rated speed
Oil Grade	API Specification CF or CG-4.

Transmission Specifications: Refer to the transmission section in this manual.

COOLING SYSTEM

Description	Fresh water-cooled block, thermostatically-controlled with heat exchanger.
Operating Temperature	170° – 190° F (77° – 88° C)
Fresh Water Pump	Centrifugal type, metal impeller, belt-driven.
Raw Water Pump	Positive displacement, rubber impeller, belt-driven.
Coolant Capacity	Quarts [Liters]
M3-20B	3.75 [3.5]
M-25XPB	4.0 [3.8]
M-35B	6.0 [5.6]
M-40B	4.5 [4.3]
M-50B	12.0 [11.4]

FUEL SYSTEM

Description-type	Open flow, self priming
Fuel Nozzle Type	[Bosch] throttle type
Fuel Injection Pump	In-line plunger type [Bosch]
Fuel	No.2 diesel oil [centane rating of 45 or higher]
Fuel Lift Pump	12 volt 5' lift capacity solid state

ELECTRICAL SYSTEM

Starting Battery	12 Volt, (–) negative ground.
Battery Capacity	400 – 600 Cold Cranking Amps (CCA).
DC Charging Alternator	51 Amp rated, belt driven
Starting Aid	Glow plugs, sheathed type
Starter	12 Volt, reduction gear
Alternator	51 Amp with internal regulation, set volts at 14.7 max.

TUNE-UP SPECIFICATIONS

Compression Pressure [at 250 RPM]	
M3-20B, M-25XPB	412 - 469 PSI [2.84 - 3.23 MPa}
M-35B, M-40B	
M-50B	512 - 540 PSI [35.3 - 37.2 MPa]
Injection Pressure	1991 PSI [13.73 MPa] static timed
Engine Timing	18° [0.314 RAD] before TDC Exhaust 45°
Valve Clearance (engine COLD)	Inches [mm]
M3-20B	0.0057 - 0.0072 [0.145 - 0.185]
M-25XPB	0.0057 - 0.0072 [0.145 - 0.185]
M-35B	0.0057 - 0.0072 [0.145 - 0.185]
M-40B	0.0057 - 0.0072 [0.145 - 0.185]
M-50B	0.0071 - 0.0087 [0.18 - 0.22]

SUGGESTED SPARE PARTS

UNIVERSAL MARINE ENGINES

CONTACT YOUR UNIVERSAL DEALER FOR SUGGESTIONS AND ADDITIONAL INFORMATION

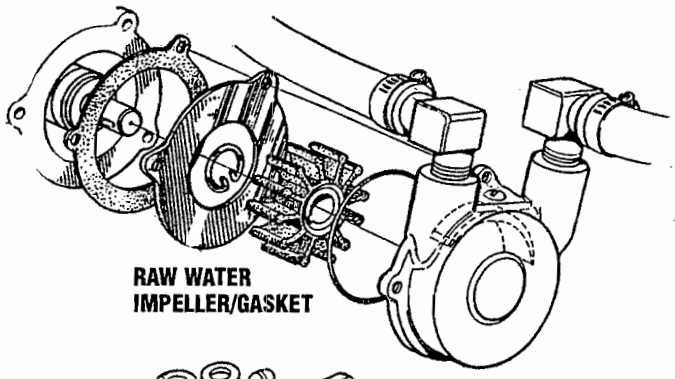

RAW WATER IMPELLER/GASKET

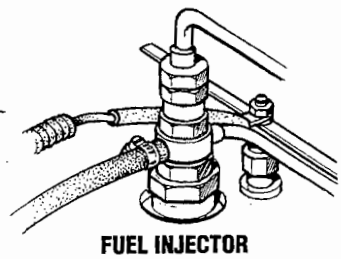

FUEL INJECTOR

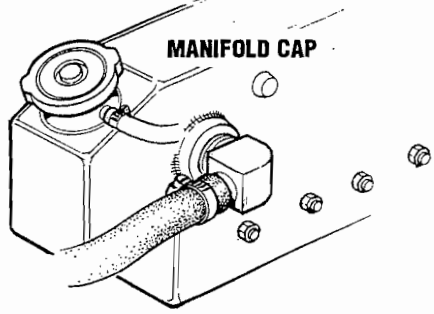

MANIFOLD CAP



HARDWARE KIT

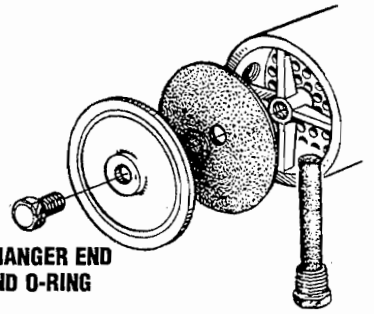

HEAT EXCHANGER END GASKET AND O-RING

ZINC ANODES

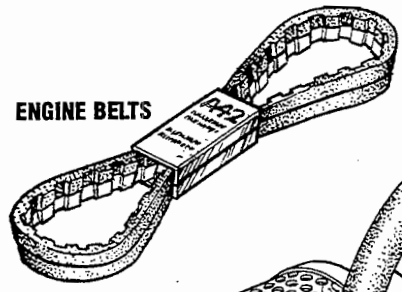

ENGINE BELTS

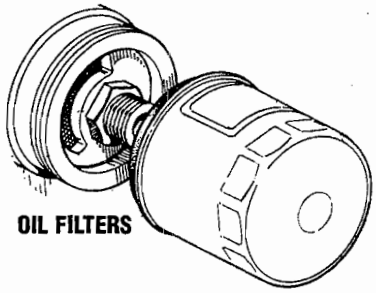

OIL FILTERS

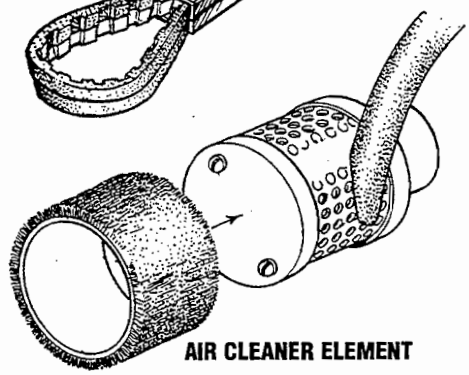

AIR CLEANER ELEMENT

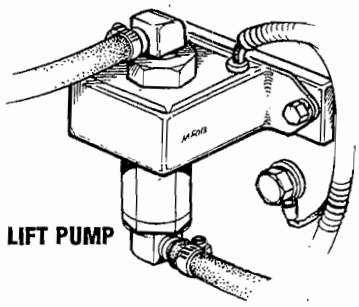

LIFT PUMP

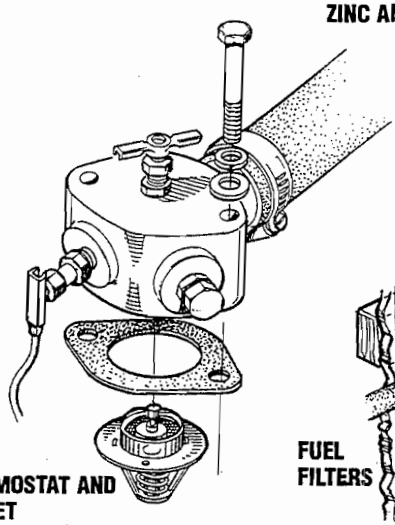

THERMOSTAT AND GASKET

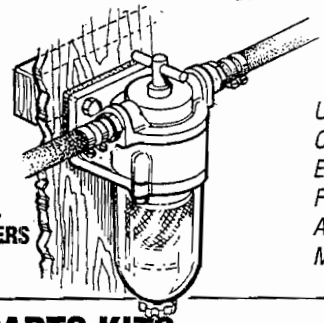

FUEL FILTERS

UNIVERSAL RECOMMENDS CARRYING ENOUGH SPARE ENGINE OIL (YOUR BRAND) FOR AN OIL CHANGE, AND A GALLON OF PRE-MIXED COOLANT.

UNIVERSAL SPARE PARTS KITS

UNIVERSAL also offers two Spare Parts Kits, each packaged in a rugged hinged toolbox.
Kit "A" includes the basic spares.
Kit "B" is for more extensive off-shore cruising.

KIT A

- Impeller Kit
- Heat Exchanger Gasket
- Fuel Filter
- Fuel Filter with Gasket
- Oil Filter
- Belt
- Zinc Anodes

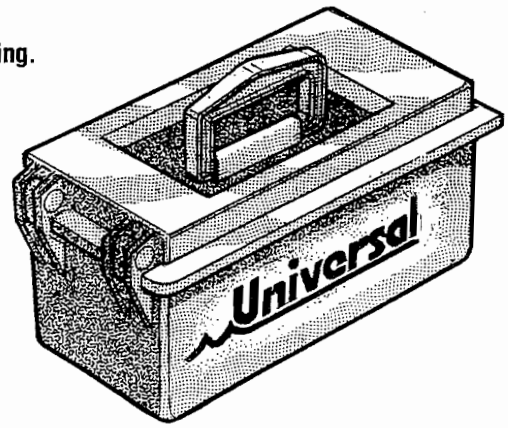

KIT B

- Impeller Kit
- Oil Filter
- Water Pump Repair Kit
- Zinc Anodes
- Heat Exchanger Gasket
- Thermostat Kit
- Complete Gasket Kit
- Injector
- Fuel Filter
- Fuel Filter with Gasket
- Belt
- Glow Plug

STANDARD HARDWARE

BOLT HEAD MARKINGS

Bolt strength classes are embossed on the head of each bolt.

Customary (inch) bolts are identifed by markings two to grade eight (strongest). The marks correspond to two marks less than the actual grade, i.e.; a grade seven bolt will display five embossed marks.

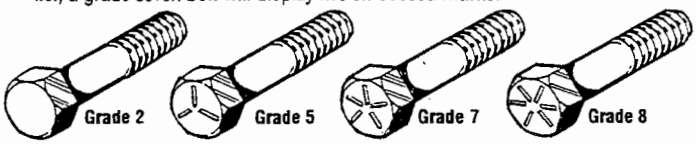

Metric bolt class numbers identify bolts by their strength with 10.9 the strongest.

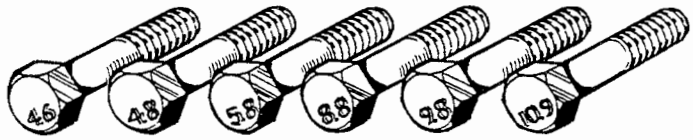

NOTES: 1. *Use the torque values listed below when specific torque values are not available.*
2. *These torques are based on clean, dry threads. Reduce torque by 10% when engine oil is used.*
3. *Reduce torques by 30% or more, when threading capscrews into aluminum.*

STANDARD BOLT & NUT TORQUE SPECIFICATIONS

Capsrew Body Size (Inches) - (Thread)	SAE Grade 5 Torque Ft-Lb (Nm)	SAE Grade 6-7 Torque Ft-Lb (Nm)	SAE Grade 8 Torque Ft-Lb (Nm)
1/4 - 20	8 (11)	10 (14)	12 (16)
- 28	10 (14)		14 (19)
5/16 - 18	17 (23)	19 (26)	24 (33)
- 24	19 (26)		27 (37)
3/8 - 16	31 (42)	34 (46)	44 (60)
- 24	35 (47)		49 (66)
7/16 - 14	49 (66)	55 (75)	70 (95)
- 20	55 (75)		78 (106)
1/2 - 13	75 (102)	85 (115)	105 (142)
- 20	85 (115)		120 (163)
9/16 - 12	110 (149)	120 (163)	155 (210)
- 18	120 (163)		170 (231)
5/8 - 11	150 (203)	167 (226)	210 (285)
- 18	170 (231)		240 (325)
3/4 - 10	270 (366)	280 (380)	375 (508)
- 16	295 (400)		420 (569)
7/8 - 9	395 (536)	440 (597)	605 (820)
- 14	435 (590)		675 (915)
1 - 8	590 (800)	660 (895)	910 (1234)
- 14	660 (895)		990 (1342)

METRIC BOLT & NUT TORQUE SPECIFICATIONS

Bolt Dia.	Wrench Size	Grade 4.6 Ft-Lb (Nm)	Grade 4.8 Ft-Lb (Nm)	Grade 8.8 - 9.8 Ft-Lb (Nm)	Grade 10.9 Ft-Lb (Nm)
M3	5.5 mm	0.3 (0.5)	0.5 (0.7)	1 (1.3)	1.5 (2)
M4	7 mm	0.8 (1.1)	1 (1.5)	2 (3)	3 (4.5)
M5	8 mm	1.5 (2.5	2 (3)	4.5 (6)	6.5 (9)
M8	10 mm	3 (4)	4 (5.5)	7.5 (10)	11 (15)
M9	13 mm	7 (9.5)	10 (13)	18 (25)	35 (26)
M10	16 mm	14 (19)	18 (25)	37 (50)	55 (75)
M12	18 mm	26 (35)	33 (45)	63 (85)	97 (130)
M14	21 mm	37 (50)	55 (75)	103 (140)	151 (205)
M16	24 mm	59 (80)	85 (115)	159 (215)	232 (315)
M18	27 mm	81 (110)	118 (160)	225 (305)	321 (435)
M20	30 mm	118 (160)	166 (225)	321 (435)	457 (620)
M22	33 mm	159 (215)	225 (305)	435 (590)	620 (840)
M24	36 mm	203 (275)	288 (390)	553 (750)	789 (1070)
M27	41 mm	295 (400)	417 (565)	811 (1100)	1154 (1565)
M30	46 mm	402 (545)	568 (770)	1103 (1495)	1571 (2130)
M33	51 mm	546 (740)	774 (1050)	1500 (2035)	2139 (2900)
M36	55 mm	700 (950)	992 (1345)	1925 (2610)	2744 (3720)

SEALANTS & LUBRICANTS

GASKETS/SEALANTS

Oil based PERMATEX #2 and it's HIGH TACK equivalent are excellent all purpose sealers. They are effective in just about any joint in contact with coolant, raw water, oil or fuel.

A light coating of OIL or LIQUID TEFLON can be used on rubber gaskets and O-rings.

LOCTITE hydraulic red sealant should be used on oil adapter hoses and the oil filter assembly.

Coat both surfaces of the oil pan gasket with high temp RED SILICONE sealer.

When installing gaskets that seal around water (coolant) passages, coat both sides with WHITE SILICONE grease.

High-copper ADHESIVE SPRAYS are useful for holding gaskets in position during assembly.

Specialized gasket sealers such as HYLOMAR work well in applications requiring non-hardening properties. HYLOMAR is particlarly effective on copper cylinder-head gaskets as it resists fuel, oil and water.

Use LIQUID TEFLON for sealing pipe plugs and fillings that connect coolant passages. **Do not use tape sealants!**

BOLTS & FASTENERS/ASSEMBLIES

Lightly oil head bolts and other fasteners as you assemble them. Bolts and plugs that penetrate the water jacket should be sealed with PERMATEX #2 or HIGH TACK.

When assembling the flywheel, coat the bolt threads with LOCTITE blue.

Anti-seize compounds and thread locking adhesives such as LOCTITE protect threaded components yet allows them to came apart when necessary. LOCTITE offers levels of locking according to the job.

LITHIUM based grease is waterproof, ideal for water pump bearings and stuffing boxes.

Heavily oil all sliding and reciprocating components when assembling. **Always use clean engine oil!**

STANDARD AND METRIC CONVERSION DATA

LENGTH-DISTANCE

Inches (in) x 25.4 = Millimeters (mm) x .0394 = Inches
Feet (ft) x .305 = Meters (m) x 3.281 = Feet
Miles x 1.609 = Kilometers (km) x .0621 = Miles

VOLUME

Cubic Inches (in^3) x 16.387 = Cubic Centimeters x .061 = in^3
Imperial Pints (IMP pt) x .568 = Liters (L) x 1.76 = IMP pt
Imperial Quarts (IMP qt) x 1.137 = Liters (L) x.88 = IMP qt
Imperial Gallons (IMP gal) x 4.546 = Liters (L) x .22 = IMP gal
Imperial Quarts (IMP qt) x 1.201 = US Quarts (US qt) x .833 = IMP qt
Imperial Gallons (IMP gal) x 1.201 = US Gallons (US gal) x .833 = IMP gal
Fluid Ounces x 29.573 = Milliliters x .034 = Ounces
US Pints (US pt) x .473 = Liters(L) x 2.113 = Pints
US Quarts (US qt) x .946 = Liters (L) x 1.057 = Quarts
US Gallons (US gal) x 3.785 = Liters (L) x .264 = Gallons

MASS-WEIGHT

Ounces (oz) x 28.35 = Grams (g) x .035 = Ounces
Pounds (lb) x .454 = Kilograms (kg) x 2.205 = Pounds

PRESSURE

Pounds Per Sq In (psi) x 6.895 = Kilopascals (kPa) x .145 = psi
Inches of Mercury (Hg) x .4912 = psi x 2.036 = Hg
Inches of Mercury (Hg) x 3.377 = Kilopascals (kPa) x .2961 = Hg
Inches of Water (H_2O) x .07355 = Inches of Mercury x 13.783 = H_2O
Inches of Water (H_2O) x .03613 = psi x 27.684 = H_2O
Inches of Water (H_2O) x .248 = Kilopascals (kPa) x 4.026 = H_2O

TORQUE

Pounds-Force Inches (in-lb) x .113 = Newton Meters (Nm) x 8.85 =in-lb
Pounds-Force Feet (ft-lb) x 1.356 = Newton Meters (Nm) x .738 = ft-lb

VELOCITY

Miles Per Hour (MPH) x 1.609 = Kilometers Per Hour (KPH) x .621 = MPH

POWER

Horsepower (Hp) x .745 = Kilowatts (Kw) x 1.34 = MPH

FUEL CONSUMPTION

Miles Per Hour IMP (MPG) x .354 = Kilometers Per Liter (Km/L)
Kilometers Per Liter (Km/L) x 2.352 = IMP MPG
Miles Per Gallons US (MPG) x .425 = Kilometers Per Liter (Km/L)
Kilometers Per Liter (Km/L) x 2.352 = US MPG

TEMPERATURE

Degree Fahrenheit (°F) = (°C X 1.8) + 32
Degree Celsius (°C) = (°F - 32) x .56

METRIC CONVERSIONS

INCHES TO MILLIMETERS

Inches	mm	Inches	mm
1	25.40	15	381.00
2	50.80	20	508.00
3	76.20	25	635.00
4	101.60	30	762.00
5	127.00	35	889.00
10	254.00	40	1016.00

MILLIMETERS TO INCHES

mm	Inches	mm	Inches
1	0.0394	15	0.5906
2	0.0787	20	0.7874
3	0.1181	25	0.9843
4	0.1575	30	1.1811
5	0.1969	35	1.3780
10	0.3937	40	1.5748

10 MILLIMETERS = 1 CENTIMETER, 100 CENTIMETERS = 1 METER = 39.37 INCHES (3.3 FEET)

INCHES TO METERS

Inches	Meters	Inches	Meters
1	0.0254	7	0.1778
2	0.0508	8	0.2032
3	0.0762	9	0.2286
4	0.1016	10	0.2540
5	0.1270	11	0.2794
6	0.1524	12	0.3048

METERS TO INCHES

Meters	Inches	Meters	Inches
0.1	3.937	0.7	27.559
0.2	7.874	0.8	31.496
0.3	11.811	0.9	35.433
0.4	15.748	1.0	39.370
0.5	19.685	1.1	43.307
0.6	23.622	1.2	47.244

TO CONVERT METERS TO CENTIMETERS, MOVE DECIMAL POINT TWO PLACES TO THE RIGHT

YARDS TO METERS

Yards	Meters	Yards	Meters
1	0.91440	6	5.48640
2	1.82880	7	6.40080
3	2.74320	8	7.31520
4	3.65760	9	8.22960
5	4.57200	10	9.14400

METERS TO YARDS

Meters	Yards	Meters	Yards
1	1.09361	6	6.56168
2	2.18723	7	7.65529
3	3.28084	8	8.74891
4	4.37445	9	9.84252
5	5.46807	10	10.93614

MOVE DECIMAL POINT FOR HIGHER VALUES — e.g. 6,000 METERS = 6,561.68 YARDS

POUNDS TO KILOGRAMS

lb	kg	lb	kg
1	0.454	6	2.722
2	0.907	7	3.175
3	1.361	8	3.629
4	1.814	9	4.082
5	2.268	10	4.536

KILOGRAMS TO POUNDS

kg	lb	kg	lb
1	2.205	6	13.228
2	4.409	7	15.432
3	6.614	8	17.637
4	8.818	9	19.842
5	11.023	10	22.046

GALLONS TO LITERS

Gallons	Liters	Gallons	Liters
1	3.79	10	37.86
2	7.57	20	75.71
3	11.36	30	113.57
4	15.14	40	151.42
5	18.93	50	189.28

LITERS TO GALLONS

Liters	Gallons	Liters	Gallons
1	0.26	60	15.66
2	0.53	90	23.77
5	1.32	120	31.32
10	2.64	150	39.62
20	5.28	180	47.54

PINTS TO LITERS

Pints	Liters	Pints	Liters
1	0.47	6	2.84
2	0.95	7	3.31
3	1.42	8	3.79
4	1.89	9	4.26
5	2.37	10	4.73

LITERS TO PINTS

Liters	Pints	Liters	Pints
1	2.11	6	12.68
2	4.23	7	14.79
3	6.34	8	16.91
4	8.45	9	19.02
5	10.57	10	21.13

TEMPERATURE

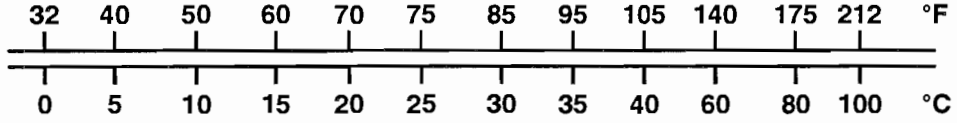

EUROPEAN MARITIME COUNCIL CERTIFICATION
EUROPEAN ECONOMIC COUNCIL

Declaration of Conformity

Application of Council Directives	**EMC 89/336/EEC 9**
Standard(s) to Which Conformity is declared	**EN50081-1 EN50082-2 EN55020**
Manufacturer's Name and Address	**Westerbeke Corporation • 41 Ledin Drive Avon Industrial Park • Avon, MA 02322, USA**
Type of Equipment	**Marine Diesel Engine**
Product Name	**Universal Marine Diesel Engine**
Model(s)	**M25-XPB, M35B, M40B**
Product Options	**All**

Supplementary Information

1.) The equipment listed is only for use in Marine Applications aboard boats.
2.) The equipment listed must be located below decks on the vessel and permanently installed in it's location.
3.) The equipment listed must be wired to the grounding system of the vessel.

I the undersigned, hereby declare that the equipment specified above conforms to the above Directive(s) and Standard(s).

Place Avon Massachusetts, U.S.A

C F Bryan

(Signature)

Date January 1, 1996

Carleton F. Bryant, Chief Operating Officer

INTERNATIONAL MARINE CERTIFICATION INSTITUTE

Rond Point Schuman 6, Box 6 • B - 1040 BRUXELLES • BELGIQUE • tel: +32 (0) 2-238-7892 • fax: +32 (0) 2-238-7700

CERTIFICATE

We hereby certify that the engines(s) stated below meet the EC Directive 94/25/EC.
1999 I.M.C.I. Power Rating Report

MANUFACTURER	Westerbeke Corporation
ADDRESS	Avon Industrial Park, Avon, MA 02333 USA
MODEL NAME	M 25 - XPB

SPECIFICATIONS	
Engine Type	Inboard
Fuel Type	Diesel
Aspiration Type	Natural

Rating Level		Highest Output (1)	(2)	(3)	(4)	Lowest Output(5)
Crankshaft Power	(kW)	18,3	-	-	-	-
Propeller shaft Power	(kW)	17,8	-	-	-	-
at RPM	(min^{-1})	3.000	-	-	-	-

Certification Number	WESTERID004
Signed	Lars E. Grönholm
Name	Lars E. Grönholm
Title	Managing Director
EU Notified Body No	0609
Date	27-Jun-99

Manufacturer's verification statement	
Power rating is in accordance with IMCI Proceedure. Compliance verified in accordance with ISO 8665 and ISO 15584 (only for inboard petrol engines). This application form has not been lodged with any other notified body.	
Company:	Westerbeke Corporation
Date:	27-Jun-99
Name:	Carl F. Bryant
Title:	Chief Operating Officer
Signature:	C F Bryan

INTERNATIONAL MARINE CERTIFICATION INSTITUTE

Rond Point Schuman 6, Box 6 • B - 1040 BRUXELLES • BELGIQUE • tel: +32 (0) 2-238-7892 • fax: +32 (0) 2-238-7700

CERTIFICATE

We hereby certify that the engines(s) stated below meet the EC Directive 94/25/EC.
1999 I.M.C.I. Power Rating Report

MANUFACTURER	Westerbeke Corporation
ADDRESS	Avon Industrial Park, Avon, MA 02333 USA
MODEL NAME	M 35B

SPECIFICATIONS	
Engine Type	Inboard
Fuel Type	Diesel
Aspiration Type	Natural

Rating Level		Highest Output (1)	(2)	(3)	(4)	Lowest Output(5)
Crankshaft Power	(kW)	25,1	•	•	•	•
Propeller shaft Power	(kW)	24,3	•	•	•	•
at RPM	(min^{-1})	3.000	•	•	•	•

Certification Number	WESTERID004
Signed	
Name	Lars E. Granholm
Title	Managing Director
EU Notified Body No	0609
Date	1-Mar-99

Manufacturer's verification statement	
Power rating is in accordance with IMCI Proceedure. Compliance verified in accordance with ISO 8665 and ISO 15584 (only for inboard petrol engines). This application form has not been lodged with any other notified body.	
Company:	Westerbeke Corporation
Date:	1-Mar-99
Name:	Carl F. Bryant
Title:	Chief Operating Officer
Signature:	

INTERNATIONAL MARINE CERTIFICATION INSTITUTE

Rond Point Schuman 6, Box 6 • B - 1040 BRUXELLES • BELGIQUE • tel: +32 (0) 2-238-7892 • fax: +32 (0) 2-238-7700

CERTIFICATE

We hereby certify that the engines(s) stated below meet the EC Directive 94/25/EC.
1999 I.M.C.I. Power Rating Report

MANUFACTURER	Westerbeke Corporation
ADDRESS	Avon Industrial Park, Avon, MA 02333 USA
MODEL NAME	Universal M 40B

SPECIFICATIONS	
Engine Type	Inboard
Fuel Type	Diesel
Aspiration Type	Natural

Rating Level		Highest Output (1)	(2)	(3)	(4)	Lowest Output(5)
Crankshaft Power	(kW)	26,6	•	•	•	•
Propeller shaft Power	(kW)	26,1	•	•	•	•
at RPM	(min^{-1})	3.000	•	•	•	•

Certification Number	WESTERID004
Signed	
Name	Lars E. Granholm
Title	Managing Director
EU Notified Body No	0609
Date	16-Sep-99

Manufacturer's verification statement	
Power rating is in accordance with IMCI Proceedure. Compliance verified in accordance with ISO 8665 and ISO 15584 (only for inboard petrol engines). This application form has not been lodged with any other notified body.	
Company:	Westerbeke Corporation
Date:	16-Sep-99
Name:	Carl F. Bryant
Title:	Chief Operating Officer
Signature:	