SERVICE BULLETIN

DATE: 9 DECEMBER 2005 **SERVICE BULLETIN #247**

MODELS: UNIVERSAL M25XPB, M25XPBC, M35B, M35BC, M40B

SUBJECT: FUEL FILTER BRACKET #300103

FRACTURES HAVE BEEN REPORTED FROM THE FIELD IN THE AREA OF THE 90-DEGREE BEND IN THE #300103 BRACKET.

INSPECTION OF BRACKETS RETURNED FROM THE FIELD HAS SHOWN THAT THE 90-DEGREE BEND WAS INCORRECTLY PERFORMED USING A KNIFE-EDGE BENDER RATHER THAN A RADIUS BENDER.

THIS KNIFE EDGE BENDING PROCESS PLACES A NOTICEABLE CREASE ALONG THE BEND, WHICH CAN STRESS THIS AREA OF THE METAL CREATING THE POSSIBILITY OF A FRACTURE TAKING PLACE ALONG THIS CREASE.

THE ABOVE SUBJECT MODELS USING THIS BRACKET MANUFACTURED PRIOR TO SEPTEMBER 2004 (E409) ARE SUSPECT. VISUALLY INSPECT THE BRACKET AND IF A CREASE IS VISIBLE ALONG THE BEND AREA. CONTACT WESTERBEKE CORPORATION AT 508-823-7677. PROVIDE THE ENGINE MODEL AND SERIAL NUMBER AND A SHIPPING ADDRESS AND A REPLACEMENT BRACKET WILL BE SENT AT NO CHARGE.

NOTE: TO LOW OF AN ENGINE IDLE SPEED WILL PRODUCE FILTER VIBRATIONS THAT CAN AFFECT THE FILTER BRACKET AND LED TO ITS FRACTURING AT THE 90 DEGREE BEND.

THE ILLUSTRATION BELOW SHOULD HELP TO SHOW THE DIFFERENCES IN THE 90 DEGREE BENDS.

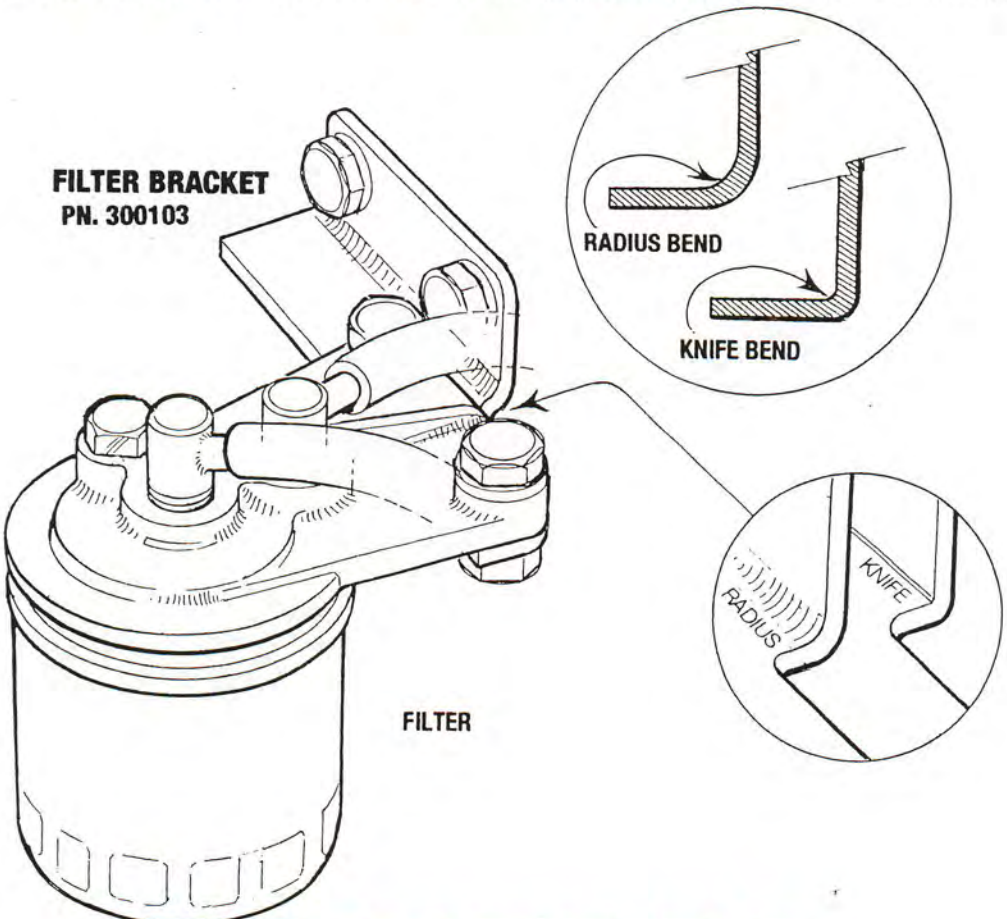

WESTERBEKE
WESTERBEKE CORPORATION • TEL. 1-508-823-7677
MYLES STANDISH INDUSTRIAL PARK,
150 JOHN HANCOCK ROAD, TAUNTON, MA 02780-7319