Catalina Yachts
MORGAN DIVISION

CATALINA 350

OWNER'S MANUAL

04/23/02

FOREWORD

Congratulations on the acquisition of your new Catalina. All Catalina yachts are designed and built with care using quality materials to assure you years of sailing enjoyment with a minimum of upkeep and maintenance.

Before attempting maintenance or operation of your Catalina Yacht, please read the Catalina Yachts Limited Warranty booklet and fill out the enclosed warranty registration card.

The registration card enables Catalina to inform you of developments and modifications to enhance the performance or comfort of your yacht. It is also important to be able to contact owners to comply with Coast Guard defect notification requirements.

Experienced boat yard personnel under the direction of your authorized dealer should handle the launching and rigging of your Catalina Yacht.

The index page lists the contents of this manual. Warrantees and information regarding installed optional equipment have been included when available and applicable.

Maintaining your yacht properly can become a satisfying part of your sailing activities. A regular inspection is the best preventive maintenance. It will help keep your boat safe and in good condition while in use, and insure peace of mind when the boat is left unattended.

Take good care of your boat and take the time to learn and practice good seamanship.

PREFACE

This manual is intended and supplied to help owners of Catalina Yachts understand their boats and answer common questions about maintenance and systems design specific to their boat.

This manual is not intended to provide sailing instructions. It is assumed the operator will consult books written for that purpose, or take sailing lessons or courses to gain knowledge necessary for the safe operation of the vessel.

The systems descriptions and illustrations in this manual apply to boats built at the time of publication. Our policy of constant improvement necessitates that changes have been made to the boat since its introduction. Therefore, these illustrations and descriptions may not apply to boats built before the time of publication.

Owners of earlier hulls, who have questions not answered herein, should consult with their local Catalina dealer, or write to, or e-mail Catalina Yachts Customer service. Please include your hull number in all communication.

The maintenance checklists contained within this manual are intended as guidelines for boats in normal service under typical conditions.

Climate and use will vary and may require additional or special maintenance. Consult with your local boat yard or Catalina dealer for specific maintenance and precautions recommended for your purposes and climate.

Caution: The aluminum and other metal parts conduct electricity. Coming in contact with or near an electrical power line or lightening can cause severe injury or death. Stay away from overhead electrical power lines when sailing and/or launching the boat.

TABLE OF CONTENTS

	PAGE
Forward	1
Preface	2
Table of Contents	3
Commissioning Check List	6
Maintenance Check List	10
Specifications	13
Sail Plan	14
Bottom Barrier Coating and Preparation	15
Interior Teak Maintenance	15
Cabin Sole Maintenance	16
Upholstery Maintenance	17
Hatch Maintenance	18
Fixed Port Maintenance	19
Spar and Rigging Maintenance	20
Sail Maintenance	22
Rigging- Mast	23
Reefing	24
Rigging Length Schedule	25
Standing Rigging	26
Deck Plan	27

Deck Plan Parts List 28

Mainsheet System 29

Boom Vangs 30

Cabin Top Control Arrangement 32

Spinnaker Option Rigging 33

Electrical System, DC 34

12 Volt Wiring Schematic 37

Mast Light Wiring 38

Electrical AC 110- 115 Volt 39

Electrical Plan, 110 Volt Schematic 41

Electrical Plan, 240 Volt Schematic 42

DC Panel 43

AC Panel 44

Plumbing 45

Fresh Water Schematic 48

Sanitary Schematic 49

Thru Hull Locations 50

Tank Locations 51

Auxiliary Power 52

Shaft Alignment 53
Shaft Alignment Drawing 54

Fueling 55

Steering	58
Accommodation	59
Interior Plan	60
Decommissioning	61
Owner/User Responsibility	64
Lightning Protection	67
Commissioning Package	75
Literature and warranties for equipment, which may be supplied with this manual.	76
Warning Labels	77-79
Lifting Points	80

COMMISSIONING CHECK LIST

This checklist is intended as a guide to aid in the proper delivery and commissioning of a new boat to the originator purchaser. It may also be useful to review this list each time the boat is recommissioned after storage.

PRE-LAUNCH CHECK: (before stepping mast)

1. _____Shaft turns freely by hand, zinc collar installed if required.
2. _____Check intake hoses and clamps.
3. _____Check dripless shaft seal per the manufacturers specifications.
4. _____Check all through hull fittings.
5. _____Engine drain plugs tight, ____ engine, muffler and exhaust line OK.
6. _____Bottom clean, paint OK.
7. _____Hull sides clean, gel coat OK.
8. _____Decks clean, gel coat OK.
9. _____ Interior varnish OK.
10. _____Cushions, curtains, clean and in place.
11. _____Lifelines, pelican hooks and pulpits rigged and OK.
12. _____ Spreaders taped at base end, upper shroud and intermediate wired to tip end and taped or boots installed.
13. _____ Rigging lengths verified with checklist in kit.
14. _____ Mast and boom inspected; cotter pins, sheaves, tangs, spreaders, reef lines, outhaul, OK.
15. _____ Mast lights checked before mast stepped
16. _____ Check overhead for electrical wires, which may interfere with the space required to raise the mast to its full upright position. If there are wires of any kind anywhere near the boat. **Do not raise the mast.** Move boat to any other location away from any wires. Contact with wires can be fatal.
17. _____Masthead sheaves lubricated and rotate freely.

ELECTRICAL:

1. _____Lights operational:
   ___Running ___Cabin ___Bow ___Anchor ___Deck Light
2. _____ Pumps Operational: ___Pressure Water ___Macerator Pump ___Bilge Pump
3. _____Shore power system OK. Polarity correct.
4. _____Check battery switch #1___ #2___ OK.

6. _____Check battery terminals for tightness.

7. _____Check battery movement restraints.

PLUMBING AND INTERIOR:

1. _____No leaks at through hull fittings with seacocks open or closed.

2. _____Fill all water tanks.

3. _____Check all water tanks at fittings and vents for leaks.

4. _____Test all faucets and foot pumps for leaks.

5. _____Check for leaks at sink drain, sink drains OK.

6. _____Put water in icebox and check for proper drainage.

7. _____Check manual bilge pump operation, handle present.

8. _____Check head by flushing and pumping.

9. _____Check shower sump drain line.

10._____Check holding tank, and waste discharge system.

11._____Check head and pump for leaks.

12._____Main hatch: no leaks, slides freely, hatch boards fit OK.

13._____Cabin windows hose tested for leaks.

14._____Anchor locker drains OK, no Leaks.

15._____Stove operates OK; check tank, fuel line, burner and oven.

RIGGING AND HARDWARE:

1. _____Mast stepped.

2. _____Pin, tape and tune standing rigging

3. _____Blocks, cars, cleats rigged OK.

4. _____Test all winches, winch handles present.

5. _____ Boom vang supports boom

6. _____ Check chainplates for leaks (**note 1*)

*Note (1): It may be necessary to rebed the chainplates after the boat has been sailed the first few time as some movement between the deck and the metal chainplate may break the bedding material seal. This movement is normal. Chainplates should be rebedded or caulked at the first sign of a leak to avoid damage to the interior wood and finishes.

ENGINE:

ENGINE:

1. _____No leaks: Shaft, rudder, stuffing box, or shaft log.

2. _____Shaft, dimpled for set bolts at coupling; bolts wired and coupling secured.

3. _____With fuel tanks full, no leaks at fill pipes, overflow vent, or any fuel line connections.

4. _____With coupling disconnected, engine and shaft alignment OK. Recheck alignment OK. Recheck alignment after rigging tuned.

5. _____Transmission fluid level OK.

6. _____Engine oil level OK.

7. _____Check fresh water/coolant level OK.

8. _____Fuel valves open, bleed and prime lines for diesel engine.

9. _____Check that shaft is coupled and aligned to .003 maximum tolerance.

10._____Engine wiring OK, connections tight.

11._____Throttle control cable travel and brackets OK.

12._____Clutch control cable travel and brackets OK.

13._____Start engine.

14._____Exhaust water flow OK.

15._____No leaks in fuel lines at fittings, fuel filter, fuel pump or injectors.

16._____No engine or oil leaks.

17._____Calibrate tachometer, Idling speed set ___ R.P.M.'S.

18._____ Check shutoff cable for diesel engine.

19._____Check forward and reverse shifting.

20._____Check engine instruments for operation, tachometer for calibration.

21._____Run in gear for ten (10) minutes.

22._____Recheck packing gland after engine stops.

23._____Bilge blower and vent system OK.

24._____Exhaust system, check for leaks, insulation in place.

OPERATION CHECK LIST:

1. _____ Emergency tiller trial fitted and operational.
2. _____Pedestal steering operation OK, compass OK.
3. _____Sails and halyard OK.
4. _____Boat sea trialed under power and sail OK.

FINAL CHECK:

1. _____All accessory equipment operates OK.
2. _____All boat, engine, and accessory literature, and/or manuals aboard or presented to owner.
3. _____Warranty cards completed and mailed, owner registration card attached, owner informed of warranty responsibilities.
4. _____Engine warranty card completed and mailed.
5. _____ Owner familiarized with boat, equipment and operation.

Commissioned By: _____ Date: _____

Sold and Delivered By: _____ Date: _____

PRE-USE MAINTENANCE:

RIGGING:

1. _____Inspect turnbuckles tighten as required, pinned as required.

2. _____Inspect clevis pins and cotter pins.

3. _____Visually inspect spreader tips and other areas where sails may chafe during sailing, replace tape as necessary.

4. _____Halyards free and not tangled.

5. _____Inspect mast hardware attachment bolts, tighten as required.

HULL AND DECK INSPECTION:

1. _____ Pedestal steering OK, rudderpost packing gland not weeping.

2. _____Bilge and compartments are dry.

3. _____Through hull valves, hoses, and clamps OK.

4. _____Check running lights.

ENGINE:

1. _____Check engine oil and fuel levels.

2. _____Shaft seal OK, cooling water intake valve opens and closes OK.

3. _____Throttle and shift OK.

MONTHLY MAINTENANCE:

RIGGING:

1. _____Inspect chain plates, fastenings and bolts for leaks, replace sealant and tighten as necessary. (1)

2. _____Inspect blocks, shackles, cotter pins.

3. _____Check rigging tune, rigging wire condition.

4. _____Check turnbuckles and locking pins.

NOTE (1): It may be necessary to rebed the chainplates after the boat has been sailed the first few time as some movement between the deck and the metal chainplate may break the bedding material seal. This movement is normal. Chainplates should be rebedded or caulked at the first sign of a leak to avoid damage to the interior wood and finishes.

HULL AND DECK:

HULL AND DECK:

1. _____Inspect hull valves open and close freely.
2. _____ Winches turn freely, lubricate as per manufacturer's recommendations.
3. _____Clean and wax gel coat surfaces as necessary.

ENGINE:

1. _____Check oil and fluid levels, visually check for fluid leaks.
2. _____Battery: Check fluid levels and tie downs.
3. _____Tighten all bolts and nuts to proper torque.
4. _____Check fuel tank fittings and hose clamps.
5. _____Disassemble and inspect cooling system anti-siphon
6. _____Check bolts.
7. _____Check filters.

SEASONAL MAINTENANCE:

RIGGING:

1. _____Mast head pins and sheaves turn freely.
2. _____Halyards and shackles are in good condition. (Refer to Rigging, Stepping the Mast)
3. _____Spreader tips and bases, and mast fittings OK.
4. _____All shroud terminations and swedged fittings OK, check for cracks or corrosion.
5. _____Gooseneck assembly and boom assembly OK.
6. _____Mast, boom and spreaders cleaned and waxed.
7. _____Lifelines, pelican hooks, and stanchions all OK, all pins and fittings are secure, cotter rings taped. Turnbuckles, pelican hooks and connector loops OK, screw fittings checked for thread wear.

HULL, DECK and CABIN:

1. _____All chainplates and through bolts tight.
2. _____Disassemble winches and lubricate bearings and pawls.
3. _____Inspect and coat electrical system connections, battery tie downs and terminal connectors to prevent corrosion.
4. _____Drain and flush fresh water system.
5. _____Check head and anti-siphon valve in toilet.
6. _____Hatch gaskets and hold down fasteners OK.
7. _____Bottom, keel and rudder condition of anti-fouling paint OK.
8. _____Lifelines, stanchions and pelican hooks OK.

ENGINE:

1. _____Check shaft alignment.
2. _____Clean motor thoroughly.
3. _____Inspect fuel system.
4. _____Tune engine as per manufacturer's recommendations.
5. _____Exhaust system check for leaks, or deterioration, insulation in place.

Catalina 350 Specifications
Rev: 3/3/03

PRINCIPAL DIMENSIONS

Length Over All	36' 5"	(11.10 m)
Length of Hull	35' 3"	(10.74 m)
L.W.L.	31' 3"	(9.53 m)
BEAM	13' 0"	(3.96 m)
Distance from W/L to masthead:	52' 0"	(15.85 m)

WING KEEL

Draft	4' 6"	(1.37 m)
Ballast	6212 lbs.	(2818 kg)
Designed weight (est.)	14012 lbs.	(6356 kg)
Disp/Length	205	
Theoretical hull speed	7.5 knots	
Sail Area/displacement:	16.88	

FIN KEEL

Draft	6' 8"	(2.03 m)
Ballast	5137 lbs.	(2330 kg)
Designed weight (est.)	12937 lbs.	(5868 kg)
Disp/Length	189	
Sail Area/displacement:	17.80	

RIG MEASURES

Mainsail, Rated:	276 sq. ft.	(25.64 sq. m)
Total w/ 100% Foretriangle:	613 sq. ft.	(56.95 sq. m)
Total w/ Standard 135% Genoa:	731 sq. ft.	(67.91 sq. m)
I =	46' - 9"	(14.25 m)
J =	14' - 5"	(4.41 m)
P =	40' - 11"	(12.47 m)
E =	13' - 6"	(4.11 m)

TANKAGE AND CAPACITIES

Water: Fwd.	55 Gal.	(208.2 lt.),
Aft.	22.5 Gal.	(85.2 lt.),
Water heater, electric & engine heat exchanger:	11 Gal.	(41.6 lt.)
Total Water:	88.5 Gal.	(335.0 lt.)
Holding Tank:	22 Gal.	(83.3 lt.)
Fuel:	39 Gal.	(147.6 lt.)
Refrigerator:	4 cu. ft.	(0.11 cu. m)
Freezer:	4 cu. ft.	(0.11 cu. m)
Batteries: (2)	4D Deep Cycle	

ENGINE AND CONTROLS

Universal M-35B, 35 HP (26.1 kW) Diesel,
4 cyl., 81.47 cu. in. (1.34 lt.) , fresh water cooled.
Approx. fuel consumption:
1.2 GPH (4.54 LPH) @ 2500 RPM.
Edson pedestal steering with
36" (0.91 m) stainless wheel.
Single lever engine control.

PROPELLER

2 Blade 15x10
(2 Blade 38.1 cm x 25.4 cm)
Optional: 3 Blade 15x9
(3 Blade 38.1 cm x 22.9 cm)

RIGGING

Double Spreaders in line.
Shrouds:

Upper	5/16" (0.79 cm) wire 1x19
Intermediate	1/4" (0.64 cm) wire 1x19
Fwd. Lowers	5/16" (0.79 cm) wire 1x19
Aft Lowers	5/16" (0.79 cm) wire 1x19
Forestay	5/16" (0.79 cm) wire 1x19
Backstay	5/16" (0.79 cm) wire 1x19
Backstay Bridle	1/4" (0.64 cm) wire 1x19

Rope Halyards, Low Stretch, led aft.
Solid Boom Vang, Spring Loaded.
Dutchman flaking system on mainsail.
Ball bearing blocks on all running rigging.

WINCHES

Primary: (2) Harken B44.2 STC, Chrome Bronze, Self-Tailing.
Halyard: (2) Harken B32.2 STC, Chrome Bronze, Self-Tailing.
Optional Halyard: (1) Harken Electric B40.2 STEC12, Chr. Bronze, Self-Tailing, in lieu of standard halyard on starboard cabin top.

ALL SPECIFICATIONS ARE APPROXIMATE

Note: Specifications And Or Equipment Subject To Change Without Notice.

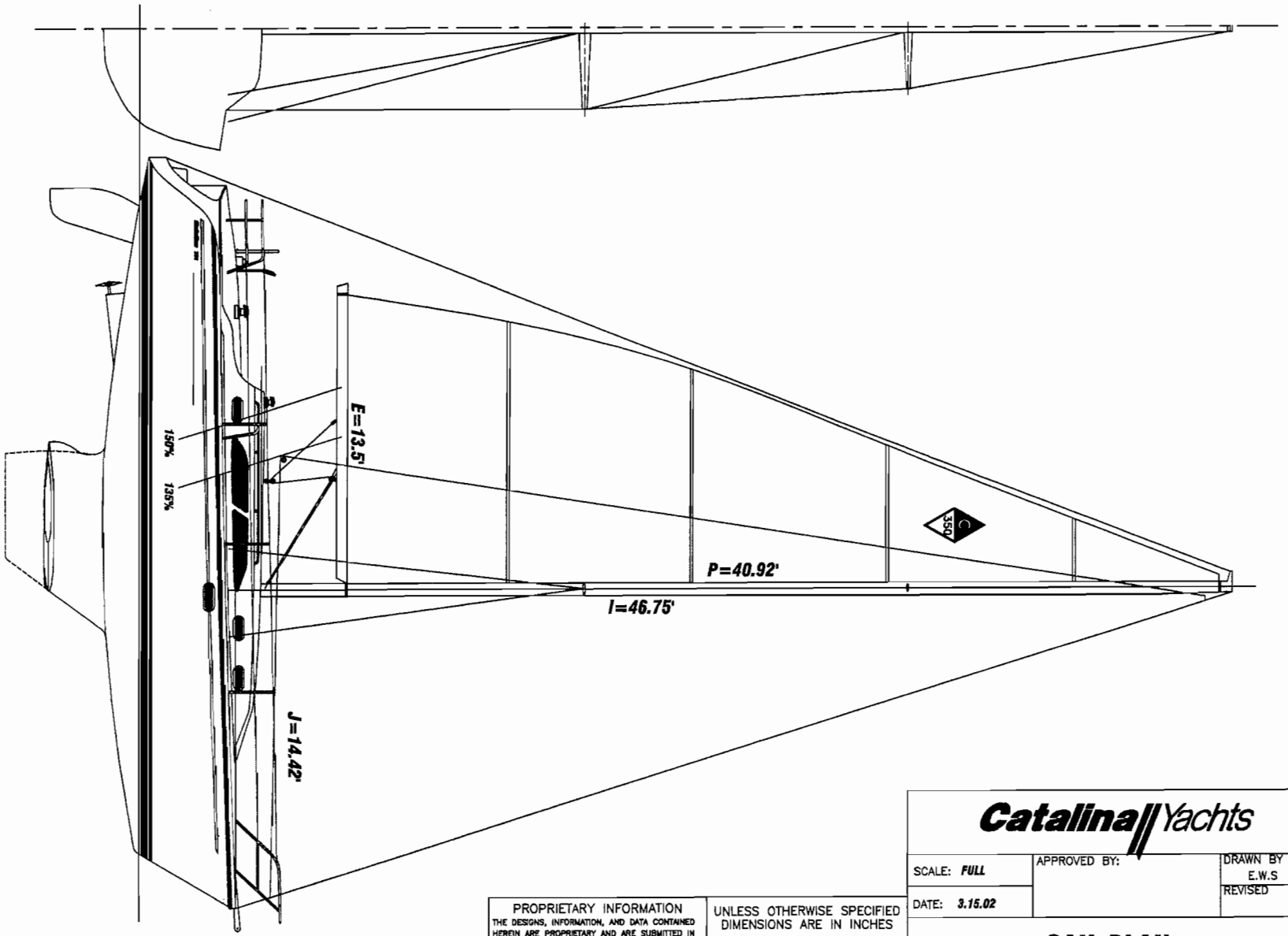

PROPRIETARY INFORMATION

THE DESIGNS, INFORMATION, AND DATA CONTAINED HEREIN ARE PROPRIETARY AND ARE SUBMITTED IN CONFIDENCE, AND SHALL NOT BE DISCLOSED, USED, OR DUPLICATED, IN WHOLE OR IN PART, FOR ANY PURPOSES WHATSOEVER, WITHOUT THE PRIOR WRITTEN PERMISSION OF CATALINA YACHTS, 21200 VICTORY BLVD. WOODLAND HILLS, CALIFORNIA 91367. THIS LEGEND SHALL BE MARKED ON ANY REPRODUCTIONS HEREOF IN WHOLE OR IN PART. RECEIPT OF THIS DOCUMENT SHALL BE DEEMED TO BE AN ACCEPTANCE OF THE CONDITIONS SPECIFIED HEREIN.

UNLESS OTHERWISE SPECIFIED DIMENSIONS ARE IN INCHES

GENERAL TOLERANCES
ANGLES : ±0.5°
X.X : ±0.1
X.XX : ±0.01
X.XXX : ±0.005
SURFACE FINISH: 63
DO NOT SCALE DRAWING

Catalina Yachts

SCALE: *FULL*	APPROVED BY:	DRAWN BY E.W.S
DATE: *3.15.02*		REVISED

SAIL PLAN

BOAT: *C-350*	DRAWING NUMBER *350-37001-4*

MAINTANANCE GUIDE

BOTTOM BARRIER COATING AND PREPARATION:

Anti-fouling paint should be applied to the bottom of your Catalina if it is to be moored in either fresh or salt water for any length of time. There are many brands available. Anti-fouling paint prevents the growth of algae, barnacles, and other fouling organisms on underwater surfaces.

Catalina models are manufactured with an integrally molded blister protection system in the hull laminate. This water absorption barrier material is between the gel coat surface layer and the laminates of the hull.

The bottom may be prepared for painting using conventional dewaxing solvents, then sanding the gel coat surface or using a chemical etching type primer. The keel has been painted using epoxy primer, filler-fairing compound and finished with epoxy paint. This material is a suitable substrate for most anti-fouling systems, however a "test patch" of the intended anti-fouling paint should be tried on a small area to insure compatibility before coating the entire keel area.

EXTERIOR TEAK MAINTENANCE:

The hatch boards are teak and can be kept looking good by occasionally oiling with teak oil.

Should the teak become weathered, cleaning and bleaching with a commercially available teak cleaner will restore the color of the wood. Then oil the wood with a good grade teak oil to restore the golden color on the teak. Do not use wire or hard bristle brushes on the wood, as this will remove the softer wood between the annual rings and leave a rough surface.

INTERIOR TEAK MAINTANANCE

The interior joiner work is coated with a clear, non-yellowing, aliphatic, water based polyurethane to provide a durable finish. Normal household fine furniture cleaners can be used to help protect and keep the finish looking new. Do not use any harsh solvents such as lacquer thinner or acetone as these will destroy the fine finish. If in doubt about a particular cleaner try the cleaner on a small inconspicuous spot first before doing a large area

IMPORTANT Always be sure to have adequate ventilation when working with varnishes, cleaners, oils or paints.

CABIN SOLE MAINTENANCE

CLEANING

In most cases, all that is required to maintain the original appearance of your Cabin Sole is wiping it with a damp cloth. For persistent stains, however, the cleaning methods listed below are recommended. Start with the first method and proceed to the next method if the stain persists. It is important that after each cleaning step, the surface of the laminate is rinsed with warm water and wiped with a dry cloth. This step prevents the buildup of cleaning agent on the laminate surface. Residual cleaning agent can be reactivated with moisture from a wet plate or cup. If this reactivated cleaning agent remains on the surface of the laminate it can damage the decorative surface.

Regular cleaning- wipe the surface of the laminate with a soft, damp cloth and a mild detergent; then rinse the laminate surface with warm water and wipe with a clean, dry cloth to remove any cleaner residue.

If the stain persists- use a damp cloth and a full-strength, all purpose cleaner. Rinse the laminate surface with warm water and wipe with a dry cloth to remove any cleaner residue.

For tougher stains- such as coffee, tea, or fruit juice, use a paste of baking soda and water. Apply this paste with a soft bristled brush and scrub gently in a circular motion for 10-20 cycles. (***Caution:*** Excessive scrubbing can dull or damage the surface of the laminate making it more prone to future stains.) Rinse the laminate surface with warm water and wipe with a clean dry cloth to remove any cleaner residue.

Extremely stubborn stains may be removed with bleach or acetone (i.e. nail polish remover). For safety reasons, rubber gloves should be worn when handling these liquids. Apply the bleach or acetone to the stain and allow it to sit for **no longer than 1-1/2** minutes, then rinse thoroughly with warm water and wipe dry with a clean cloth. (***Caution:*** prolonged exposure of the laminate surface to bleach will cause discoloration.) if this method appears to be removing the stain but not affecting the color of the laminate surface repeat this step until the stain is removed then rinse the laminate surface with warm water and wipe with a clean, dry cloth to remove any residue.

If you have any questions regarding the care and maintenance of your Pionite decorative laminate sole, please call Pionite's Customer Service department at 1-800-PIONITE (746-6483)

UPHOLSTRY MAINTENANCE

INTERIOR CUSHION- FABRIC COVER

NOTE: This applies to standard woven fabrics only, not to Ultra-leather or special order materials.

CLEANING

1) Regular vacuum cleaning or brushing in the direction of the pile with a soft brush.
2) Stains should, if possible, be removed at once with a damp cloth. Do not allow stains to harden and age.
3) Greasy stains can be removed with ordinary cleaning fluid.
4) For overall cleaning, use commercial types of upholstry shampoo using only the foam to protect the back padding from moisture. After a minute or so, remove foam, and when dry, vacuum or brush in the direction of the pile.
5) Do not use heat such as an iron or steam.
6) The use of some kind of fabric protector, such as "Scotch Guard" is strongly recommended when the cushions are new, and after each cleaning.

ULTRALEATHER

1) Spot clean with mild soap and water.
2) Air dry or dry quickly with warm setting of a hair dryer.
3) For stubborn stains, use mild solvent.

TYPE OF STAIN	MILD DETERGENT	MILD CLEANING FLUID
Coffee, Tea	x	
Red Wine, Liquor	x	
Coke, Soft Drink	x	
Milk	x	
Ketchup	x	
Steak Sauce, Soy Sauce	x	
Mayonnaise, Butter	x	x
Salad Oil	x	x
Chocolate	x	x
Cosmetic Foundation	x	x
Lipstick	x	x
Face Cream	x	x
Suntan oil/ lotion	x	x
Shoe polish	x	x
Machine oil	x	x
Urine	x	x

PLEATED SHADES

A regular vacuuming is all that's required to keep the shades looking new. DO NOT hand wash, machine wash or dry clean, for it will weaken the material. A good upholstery cleaner can be used to spot clean the shades as required.

HATCH MAINTENANCE

USER NOTES

Small vent hatches are restricted to 90 degree opening and should not be forced beyond their stop position, as damage to the lever mechanism may occur. Larger hatches are not self-supporting beyond the vertical position and will fall fully open if unrestrained.

The locking ventilation position is used by closing the handles into the catch block center slot. Care should be taken not to stand on or load the hatch lid in this position, as damage could occur to the handle or catch block.

Always wash the hatch with soap, water and a soft cloth.

Never use abrasive or solvent cleaners on the acrylic lid, as this may at a later date damage the acrylic.

To avoid risk of injury care should be taken to keep hands and limbs clear of lever and lid pinch zones while operating and adjusting the hatch.

Always wash the Portlight or Fixedlight with soap, water, and a soft cloth.
Never use abrasive or solvent cleaners on the window, as this may damage the acrylic.

FRICTION LEVER ADJUSTMENT

The friction lever units installed on Ocean hatches are pre-set when manufactured to give a correct positioning with a minimum opening load. It may be necessary occasionally to adjust the lever setting to correct the operation of the hatch.

Adjustment is made by means of the socket head screws on either side of the lever assembly.

Using a 4mm (5/32) hexagon key, turn the adjusting screw approximately $1/8^{th}$ of a turn in a clockwise direction to increase the positioning force. This is most easily carried out in the fully open or closed positions.

Do not over tighten the adjusting screws.
On hatches with multiple lever units, care must be taken to adjust all levers to a similar loading.

Open the hatch and check for correct operation.

Re-adjust if necessary until desired operation is achieved.

Lubricants should not be used on the friction lever assemblies, as this will adversely affect the function of the units.

CARING FOR MAIN CABIN FIXED PORTS

WASHING

Wash ACRYLITE FF sheet with a solution of mild soap or detergent and lukewarm water. Use a clean soft cloth, applying only light pressure. Rinse with clean water and dry by blotting with a damp cloth or chamois.

Grease, oil or tar may be removed with a good grade of hexane, aliphatic naphtha, or kerosene. These solvents may be obtained at a paint or hardware store and should be used in accordance with the manufacturer's recommendations.

DO NOT USE: Window cleaning sprays, kitchen scouring compounds, or solvents such as acetone, gasoline, benzene, carbon tetrachloride or lacquer thinner. These can scratch the sheet's surface and/or weaken the sheet causing small surface cracks called "crazing".

DUSTING

Dust with a soft, damp cloth or chamois. Dry or gritty cloths may cause surface scratches and create a static electric charge on the surface (see section on neutralizing static electricity).

POLISHING

Protect ACRYLITE sheet and maintain its surface gloss by occasional polishing with a good plastic cleaner and polish. Apply a thin, even coat with a soft cloth and polish lightly with cotton flannel. Then, wipe with a damp cloth to help eliminate electrostatic charges, which can attract dust particles.

NEUTRALIZING STATIC ELECTRICITY

Several anti-static cleaners for plastics are available which will reduce electricity and dust attraction. Wiping with a soft damp cloth or chamois is all that is necessary to keep ACRYLITE sheet dust-free between applications of these cleaners.

REMOVING SCRATCHES

Fine scratches can be removed by hand polishing. Apply a plastic scratch remover to a soft flannel pad and rub. When the scratches have disappeared, remove all residue and polish. For deeper scratches, first sand lightly, with 400-grit "wet or dry" sandpaper, using plenty of water and rinsing the sandpaper frequently. Fallow by buffing with a clean muslin wheel and a good polishing compound. For the highest gloss, use a cleanup wheel made of soft cotton or flannel sections, and on which no compound is used. An electric drill with a buffing wheel is ideal.

SPAR AND RIGGING MAINTENANCE:

STANDING RIGGING:

Your boat is equipped with stainless steel standing rigging, and Dacron running rigging, to give you years of trouble-free service. However, due to normal wear and tear, it is recommended that a periodic inspection be made on all fittings and wire. Turnbuckles should never be neglected and should be unscrewed from time to time in order that they do not seize. Every three months should be about right for the average sailor. A slightly bent turnbuckle shaft or broken wire in your shrouds should be replaced immediately.

Under most conditions, 1 X 19 standing rigging has a safe "working" life span of approximately five years: seven years under ideal conditions. Factors which reduce the life of the wire are environmental factors such as high humidity (Florida, the Caribbean, and Gulf States); high salinity (Great Salt Lake, Gulf States or mooring near a sea wall with constant salt spray) extremes in temperature; and industrial pollution (pulp mills, generating plants, acid rains, and smog). High loading of the rigging, as required in most racing boats, also induces stress in the rigging system.

Many of us have to deal with at least one of these conditions and should consider replacing standing rigging nearer the five year limit.

Unlike running rigging wire rope, which gives us clear signs that it is deteriorating by broken strands and "meat hooks", standing rigging may give no sign that failure is imminent. The usual point of failure of stay or shroud is approximately ¼" inside the bottom swedged threaded stud fitting which threads into the turnbuckle barrel.

Although the stud is compressed around the wire during the swedging process, salt water and pollutants work down into the tine cavities between the wire strands and the inevitable corrosive process starts in the crevice first time the rigging becomes wet with salt water.

A common method of visually monitoring swedge-fitting conditions, employed by distance racers and cruisers, is to dab a small ring of enamel paint around the joint between the wire and the swedge fitting. This will help provide a means to see if the wire is pulling out of the fitting.

Another technique used to check the condition of swedge fittings is a "dye penetrant" test. This simple test will detect any cracks which may develop in the fittings due to internal pressure from the corrosive process. Inexpensive dye tests kits usually are available from most welding supply stores. Dye tests usually are not required by weekend sailors, but may be done before an extended cruise or ocean passage if any doubt about the integrity of the rigging exists.

All stainless steel wire rope rigging will develop some rust film when new. This is normal.

The rust is caused by two factors. When wire rope is manufactured, the wire strands are fed over steel rollers during the process of twisting or laying the wire. Trace amounts of the ferrous steel from the rollers and dyes are transferred to the wire strands. As this small amount of steel rusts it causes a film on the new wire.

The second cause of the rust film on new wire is the microscopic veins of ferrous material which exist in all stainless steel. After a period of time, as the surface material veins are depleted, and the stainless steel has been cleaned several times, new rust film development will slow to a minimum.

For the average sailor, the best insurance against a rigging failure is a periodic (every six months is recommended) inspection of all rigging parts, including turnbuckles, and replacement of standing rigging as required.

IMPORTANT: If any wear or sign of broken strands is found on the running or standing rigging, it is time to replace that part. Using your boat when the rigging is worn could cause the rigging to fail when you least expect it.

FITTINGS:

Marine fittings today need minimal maintenance. Deck hardware should be hosed down with freshwater after each sail in salt water. Stainless steel fittings such as pulpits and lifeline stanchions should be cleaned and waxed periodically to maintain their appearance. Winches require occasional cleaning and lubrication. Where possible, a maintenance brochure for your winches has been included in this manual. Masthead fittings, halyard sheaves, etc., should be inspected, cleaned and lubricated periodically. Keep your equipment clean of dirt and salt.

SPARS:

Like all other fittings, the mast and boom suffer from salt water, air and spray. These should be kept waxed where possible, and at least always hosed down with fresh water. Always see that the halyards are tied off away from the mast. This will eliminate slapping in the wind, and subsequent marking of the mast. Find a high pressure nozzle and shoot fresh water to the top of the mast and spreaders. This will help keep your sails clean, too, as they rub on the mast and spreaders.

SAIL MAINTENANCE:

Your sails should be protected from chafing. This can be done by either padding the areas that touch the sail or by having your sailmaker attach chafe patches to the sails themselves.

You should check your sails frequently for any signs of wear and have any tears or frayed stitches repaired immediately.

Sails should never be stored in the sun because they are susceptible to decay through exposure to too much ultraviolet light. Always keep your sails covered when they are not is use.

Sails should never be put away wet. If they are wet after sailing, leave them in loose bundles and dry them at your first opportunity.

For most problems, such as common dirt, dried or caked salt, etc., try scrubbing the surface with a soft bristled brush and liquid detergent. Avoid harsh powder detergents and stiff brushes, as they may damage the finish or stitching. This approach should work nicely for most applications. More severe stains can be taken care of by the following:

IMPORTANT: FOR WHITE SAILS ONLY

BLOOD: Soak the stained portion for 10 to 20 minutes in a solution of bleach (Clorox) and warm water. Generally 10 parts water to 1 part bleach. Scrub and repeat if necessary. Rinse thoroughly, particularly nylon, and dry thoroughly.

OIL, GREASE TAR, WAX: Warm water, soap and elbow grease seem to be effective. On hard stains, proprietary stain remover and dry cleaning fluids should do the trick. Be careful to remove all fluids, as they can soften the various resinated coatings.

RUST AND METALLIC STAINS: These types of stains are very often the most frustrating and difficult to remove. First scrub with soap and water, and apply acetone, M.E.K., or alcohol. As a last resort, you might try a diluted mixture (5%) of Oxalic soaked for 10 to 15 minutes. Hydrochloric Acid, 2 parts to 100 in warm water, will also work.

MILDEW: Hot soapy water with a little bleach will generally prevail. After scrubbing, leave the solution on the fabric for a few minutes and rinse thoroughly. When using a bleach, a residual chlorine smell may be present after rinsing. A 1% solution of Thiosulphate (photographers' Hypo) should remove all chlorine traces. Here again, rinse and dry well.

PAINT AND VARNISH: Acetone and M.E.K. should remove most common paint stains. Varnish can be easily removed with alcohol. Generally speaking, use all solvents with care. Always rinse and dry thoroughly. It should be emphasized that nylon ripstop spinnaker fabrics are less durable and more sensitive than their polyester counterparts. Bleaches and solvents can ruin nylon if not used properly.

Follow the above guidelines, take your sails into your sailmaker for periodic inspection, and you will have many effective seasons of racing and cruising pleasure.

RIGGING:

STEPPING THE MAST:

1. Before stepping the mast check all standing rigging lengths against the checklist

2. Check all mast light wiring, be sure the masthead anchor light, steaming light and deck light function, the wires exiting at the base of the spar should be taped up to prevent damage when the spar is set on the step.

3. Prepare to step the mast in the following sequence:
   a) Check all rigging lengths and inspect all end fittings.
   b) Attach all shrouds, forestay and backstay. Tape clevis pins and spreader tips, check all halyards and tape to mast.
   c) Connect and check mast wiring and mast light wiring at mast step.
   d) Make electrical connections at base of mast for mast lights and check circuits.
   e) Run halyards through turning blocks at deck.
   f) Tune rigging at dock and when under sail.

TUNING THE MAST:

To optimize performance and minimize the chance of mast failure, your mast should be tuned properly. The aims of rig tuning are as follow:

A. Ensure a straight mast athwartships.
B. Control sail shape.
C. Achieve proper helm balance in a variety of conditions.
D. Spread loads appropriately on spars, rigging, and boat.

1. First, set mast rake at 0 degree rake to ensure proper performance of the spreaders in conjunction with the shrouds. Increasing the rake of the mast allows the spreaders to fall aft of the chainplates, which neutralizes their proper function. To determine the rake of the mast hang a weight from the main halyard and adjust the headstay turnbuckle so that the weight falls just to the aft edge of the mast. Make sure that the boat is level and that there is no bend in the mast.

2. Since the boat is deck stepped, you need to induce prebend to achieve the greatest performance for your rig and sails. Inducing prebend in the mast will increase performance of your mainsail and stabilize the middle part of the mast and thus minimize rig pump in a seaway. Before tightening your lowers, induce prebend by putting a good amount of backstay, which should pull the mast forward. To also aid in this process you can attach your main halyard to the end of your boom and cleat off the halyard so that the boom is resting parallel to the water. You can then put tension onto your boom vang to help push the mast forward in its mid section. With the combination of both backstay and vang tension you should be able to achieve the proper amount of prebend in your mast. As you tighten the lower shrouds the degree of prebend can be taken out accordingly.

3. For shroud adjustment make sure that there is enough backstay to give a slight aft bend in the mast. Next the shrouds should be adjusted. First tighten your cap shrouds and ensure that the mast is in column by taking your main halyard and checking that the distance from the masthead to each chainplate is equidistant. Once this is achieved and the cap shrouds are tensioned you can now adjust the lower shrouds. Follow the same procedure as you did with the cap shrouds and as you tighten the lower shrouds a slight amount of prebend will be taken out. At this stage the cap shrouds should be tighter than the lowers. The intermediate shrouds should be the

last shrouds adjusted. The intermediates should be the least tensioned shroud on the rig. As a gauge, they should be slightly less tensioned than the lowers. Check for mast straightness by sighting up the sail track and adjust the shroud turnbuckles accordingly. Slightly ease the tension in the backstay to double check that you are happy with the fore, aft, and sideways bend of the mast (there should be of course none of the latter.)

4. The shrouds should be fine tuned while sailing to weather in a moderate breeze. Always adjust the shrouds starting from the lowers and progressing up and be sure to check for mast straightness on both tacks. Check the leeward rigging tensions as follows:

   a. Cap shrouds and lowers fairly tight with a slight decrease in tension.
   b. Intermediates just about to go slack.
   c. Continue tacking to ensure equal tension on all leeward shrouds on both tacks.
   d. Back at the dock, check that the mast is still straight athwartships.

MAINSAIL REEFING:

Reefing should always be done before it becomes necessary. Some sailors use the rule of thumb that the thought of reefing occurs to you, it is time to reef. Sailing at extreme angles of heel, 25 degrees or more, is not efficient, fast or comfortable.

Your Catalina is equipped with single line reefing, for reefing the mainsail. The system consists of a line tied around the boom and reefed through the cringles, internal boom sheaves, and blocks as shown in the illustration. A second reef line may be installed in a like manner, but to the opposite side of the boom, and led to the starboard side of the cockpit.

Tie a loop of line around the main boom with a bowline, through the cringles at the first reef and into the boom on the starboard sheave. The line exists the starboard forward sheave and through the cringle in the sail at the first reef. Lead the line to the turning block at the base of the mast, through the organizer on the deck and through the sheet stopper to the winch on the port side.

REEFING PROCEDURE:

1. Take up the slack in the main boom topping lift and ease the boom vang.

2. East the mainsheet.

3. Release the main halyard on the starboard side of the cockpit, to a predetermined point. (marking the halyard with ink or a colored thread into the line is helpful.) Recleat the halyard after lowering.

4. Pull the luff and leach cringles down to the boom by pulling the reefing line through the blocks with the port cockpit winch and cleat off.

5. Trim in the mainsheet and retension the boom vang.

6. Tie off remaining reef points with lines around boom.

7. Snug up the main halyard as required to flatten out the mainsail.

8. Ease the topping lift.

NO	REVISIONS	DATE
1	REVISED TO SUIT SEA TRIALS ON HULL #1	03/21/02
2	REVISED FORESTAY DIM. WAS 46' 5-7/8"	05/20/02
3	REVISED HALYARD LINE TYPE, WAS XLS	11/14/02
4	SHORTENED BACKSTAT BY ONE INCH.	02/12/03
5	ADDED REEFLINGS	02/24/03

– RUNNING RIGGING –

ITEM	QTY.	LENGTH	MATERIAL	NOTES
SPINNAKER SHEETS	2	80'	1/2" DIA. Y.B.	(OPTIONAL) LGE. SNAP SCHACKLES
MAINSHEET	1	100'	1/2" DIA. Y.B.	
GENOA SHEETS	2	50'	1/2" DIA. Y.B.	
MAIN HALYARD	1	120'	1/2" DIA. ULS	BLUE, HEAD BOARD SCHACKLE
GENOA HALYARD	2	120'	1/2" DIA. ULS	1 W/GREEN, 1 W/RED, LGE. SNAP SCHAC.
TRAVELER	2	35'	3/8" DIA. Y.B.	
BOOM TOP. LIFT	1	115'	3/8" DIA. Y.B.	
SPINNAKER HALYARD	1	130'	1/2" DIA. ULS	(OPTIONAL) LGE, SNAP SCHACKLE, BLUE
1ST. REEF LINE	1	60	3/8" DIA. ULS	W/ NON-FURLING MAST
2ND. REEF LINE	1	90	3/8" DIA. ULS	(OPTIONAL) W/ NON-FURLING MAST

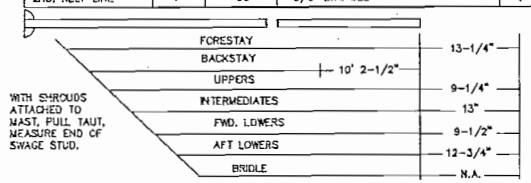

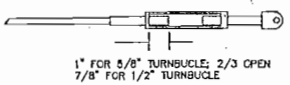

– STANDING RIGGING –

ITEM	QTY.	LENGTH*	MATERIAL	TOP FITTING	BOTTOM FITTING
FORESTAY	1	47' 4-7/8"	5/16" DIA 1x19 S.S.	MARINE EYE- 5/8" PIN	5/8" TURNBUCLE
BACKSTAY	1	35' 3"	5/16" DIA 1x19 S.S.	MARINE EYE- 5/8" PIN	FORK, 7/16" PIN
BACKSTAY BRICLE	2	15' 0"	1/4" DIA 1x19 S.S.	FORK, 3/8" PIN	5/8" TURNBUCLE
UPPERS	2	45'- 0 3/4	5/16" DIA 1x19 S.S.	GIBB FITTING #841	5/8" TURNBUCLE
INTERMED.	2	33' 5-3/16"	1/4" DIA 1x19 S.S.	GIBB FITTING #841	1/2" TURNBUCLE
FWD. LOWERS	2	16' 8"	5/16" DIA 1x19 S.S.	GIBB FITTING #841	5/8" TURNBUCLE
AFT LOWERS	2	17' 10-13/16"	5/16" DIA 1x19 S.S.	GIBB FITTING #841	5/8" TURNBUCLE

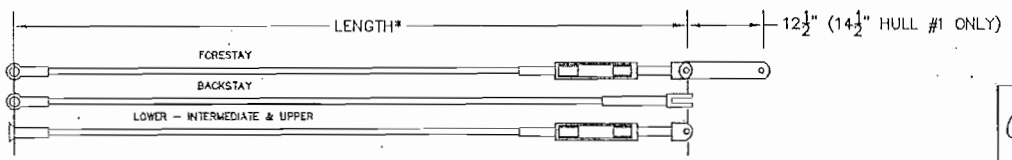

CHECK OVERHANG LENGTHS BEFORE STEPPING

NOTE:
RIGGING LENGTHS ALLOW FOR A 2100 SHEAFER FURLING SYSTEM

PROPRIETARY INFORMATION
THE DESIGNS, INFORMATION, AND DATA CONTAINED HEREIN ARE PROPRIETARY AND ARE SUBMITTED IN CONFIDENCE, AND SHALL NOT BE DISCLOSED, USED, OR DUPLICATED, IN WHOLE OR IN PART, FOR ANY PURPOSES WHATSOEVER, WITHOUT THE PRIOR WRITTEN PERMISSION OF CATALINA YACHTS, 21200 VICTORY BLVD, WOODLAND HILLS, CALIFORNIA 91367. THIS LEGEND SHALL BE MARKED ON ANY REPRODUCTIONS HEREOF IN WHOLE OR IN PART. RECEIPT OF THIS DOCUMENT SHALL BE DEEMED TO BE AN ACCEPTANCE OF THE CONDITIONS SPECIFIED HEREIN.

UNLESS OTHERWISE SPECIFIED DIMENSIONS ARE IN INCHES
GENERAL TOLERANCES
ANGLES : ±0.5°
X.X : ±0.1
X.XX : ±0.01
X.XXX : ±0.005
SURFACE FINISH: 63
DO NOT SCALE DRAWING

Catalina Yachts
7200 BRYAN DIARY RD.
LARGO, FL. 33777
(727) 544-6681

TITLE:
RIGGING LENGTH SCHEDULE STANDARD AND FURLER

BOAT: CATALINA 350		DRAWING NO: 350-34052-5		
DESIGNED BY:	CHECKED BY:	SCALE: NONE	SIZE	SHEET
DRAWN BY: G.T.B.	APPROVED BY:	DATE: 02/05/02	B	1/1

NO	REVISION	DATE
1	REVISED TO SUIT SEA TRIALS ONHULL #1	03/15/02
2	REVISED FORESTAY LENGTH, WAS 46' 3-7/8", FIRST BOAT HULL #2	04/19/02
3	REVISED LENGHT OF FORESTAY, WAS 46' 5-7/8" HULL - 05 FIRST BOAT	05/20/02
4	SHORTENED BACKSTAY BY ONE INCH	02/12/03

SHROUD	QTY.	LENGTH	MATERIAL	TOP FITTING	BOTTOM FITTING
FORESTAY	1	46' 4-7/8"	5/16" DIA	MARINE EYE 5/8" PIN	5/8" x 18 STUD
BACKSTAY	1	35' 0-11/16"	5/16" DIA	MARINE EYE 5/8" PIN	FORK 7/16 PIN
UPPERS	2	45' 3/4"	5/16" DIA	GIBBS FITTING #841	5/8" x 18 STUD
INTERMED.	2	32' 7-7/8"	1/4" DIA	GIBBS FITTING #841	1/2" x 20 STUD
FWD. LOWERS	2	16' 8-3/8"	5/16" DIA	GIBBS FITTING #841	5/8" x 18 STUD
AFT LOWERS	2	17' 7-13/16"	5/16" DIA	GIBBS FITTING #841	5/8" x 18 STUD
BRIDLE	2	14' 3-1/2"	1/4" DIA	FORK 3/8" PIN	1/2" x 20 STUD

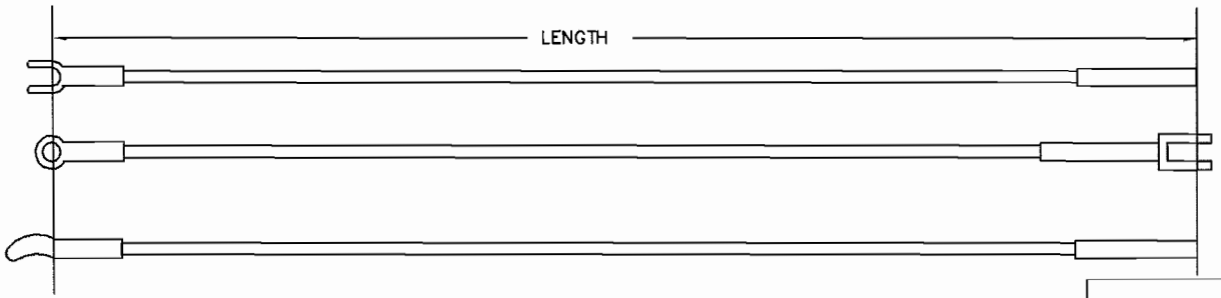

NOTE
FOR SHEAFER FURLING
SYSTEM 2100

HULL 92 AND LATER

NOTE:
1) ALL WIRE TO BE STAINLESS STEEL 1 X 19
2) FORESTAY INCLUDES ALLOWANCE FOR FURLING

PROPRIETARY INFORMATION
THE DESIGNS, INFORMATION, AND DATA CONTAINED HEREIN ARE PROPRIETARY AND ARE SUBMITTED IN CONFIDENCE, AND SHALL NOT BE DISCLOSED, USED, OR DUPLICATED, IN WHOLE OR IN PART, FOR ANY PURPOSES WHATSOEVER, WITHOUT THE PRIOR WRITTEN PERMISSION OF CATALINA YACHTS, 21200 VICTORY BLVD. WOODLAND HILLS, CALIFORNIA 91367. THIS LEGEND SHALL BE MARKED ON ANY REPRODUCTIONS HEREOF IN WHOLE OR IN PART. RECEIPT OF THIS DOCUMENT SHALL BE DEEMED TO BE AN ACCEPTANCE OF THE CONDITIONS SPECIFIED HEREIN.

UNLESS OTHERWISE SPECIFIED
DIMENSIONS ARE IN INCHES
GENERAL TOLERANCES
ANGLES : ±0.5°
X.X : ±0.1
X.XX : ±0.01
X.XXX : ±0.005
SURFACE FINISH: 63
DO NOT SCALE DRAWING

Catalina Yachts
7200 BRYAN DIARY RD.
LARGO, FL. 33777
(727) 544-6681

TITLE:
STANDING RIGGING
STANDARD AND FURLING

BOAT: CATALINA 350		DRAWING NO: 350-34053-4			
DESIGNED BY:	CHECKED BY:	SCALE: NONE	SIZE	SHEET	
DRAWN BY: C.D.	APPROVED BY:	DATE: 02/05/02	B	1/1	

NO	REVISIONS	DATE
1	DELETED TWO HATCHES FORWARD OF TRAVELER	8-1-02

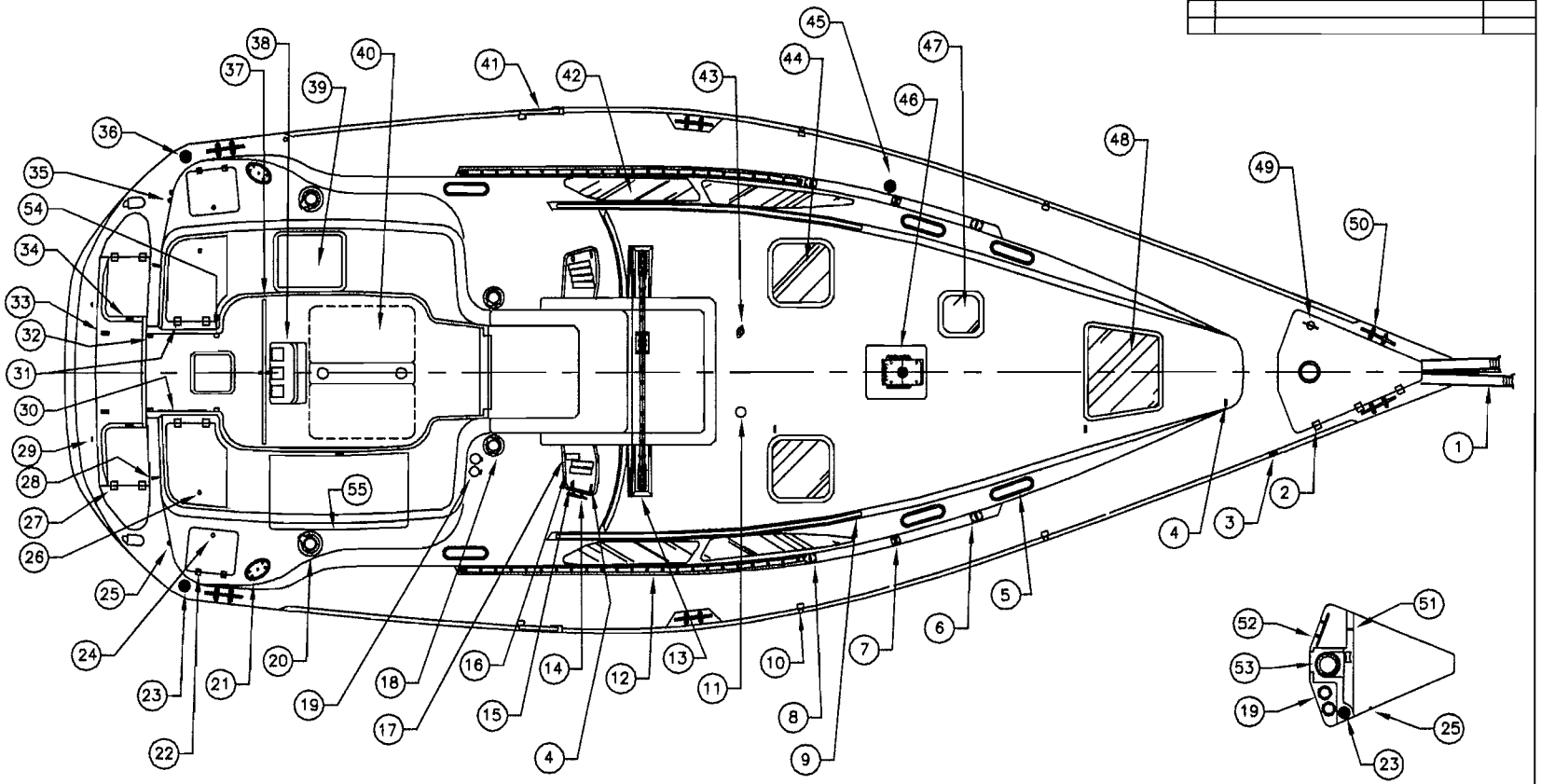

INSIDE ANCHOR LOCKER

NOT SHOWN:
BOW RAIL
STERN RAIL (2x)
SWIM LADDER
ESCAPE HATCH COVER
ESCAPE HATCH COVER HINGES (2x)
HELM SEAT

PROPRIETARY INFORMATION
THE GENERAL INFORMATION AND DATA CONTAINED HEREIN ARE PROPRIETARY AND ARE SUBMITTED IN CONFIDENCE, AND SHALL NOT BE DISCLOSED, USED, OR DUPLICATED, IN WHOLE OR IN PART, FOR ANY PURPOSES WHATSOEVER, WITHOUT THE PRIOR WRITTEN PERMISSION OF CATALINA YACHTS, 21200 VICTORY BLVD, WOODLAND HILLS, CALIFORNIA 91367. THIS LEGEND SHALL BE MARKED ON ANY REPRODUCTIONS HEREOF IN WHOLE OR IN PART. POSSESSION OF THIS DOCUMENT SHALL BE DEEMED TO BE AN ACCEPTANCE OF THE CONDITIONS SPECIFIED HEREIN.

UNLESS OTHERWISE SPECIFIED DIMENSIONS ARE IN INCHES
GENERAL TOLERANCES
ANGLES : ±0.5°
X.X : ±0.1
X.XX : ±0.01
X.XXX : ±0.005
SURFACE FINISH: 63
DO NOT SCALE DRAWING

Catalina Yachts
7200 BRYAN DAIRY RD.
LARGO, FL. 33777
(727) 544-2881

TITLE: DECK PLAN

MODEL	CATALINA 350	DRAWING NO.	350-25050-1	
DESIGNED BY	CHECKED BY	SCALE	3/4"=1'0"	SIZE D
DRAWN BY C.D.	APPROVED BY	DATE	1/15/02	SHEET 1/2

1) ANCHOR ROLLER
2) HINGE, ANCHOR LOCKER (3x)
3) STANDUP BLOCK
4) BULLSEYE FAIRLEED (5x)
5) PORTLIGHT (6x)
6) CHAINPLATE, FWD. LOWER (2x)
7) CHAINPLATE, MAIN (2x)
8) CHAINPLATE, AFT LOWER (2x)
9) HANDRAIL (2x)
10) STANCHION (4x)
11) STANDUP BLOCK
12) GENOA TRACK (2x)
13) TRAVELER ASSEMBLY
14) JAM CLEAT
15) CAM CLEAT (2x)
16) SHEET STOPPER (6x)
17) CLAM CLEAT (2x)
18) PRIMARY WINCH (2x)
19) FOOT SWITCH (4x)
20) SECONDARY WINCH (2x)
21) FOOT BLOCK (2x)
22) HINGE, PROPANE LOCKER (4x)
23) DECKFILL, WATER (2x)
24) LATCH, PROPANE LOCKER (2x)
25) VENT, PROPANE LOCKER (2x)
26) LATCH, LAZZARETTE (2x)
27) HINGE, STORAGE LOCKER (4x)
28) PADEYE, BACKSTAY (2x)
29) VENT, WATER TANK (2x)
30) DECK SHOWER
31) HINGE, LAZZARETTE (4x)
32) DOGGIE GATE BRACKET (2x)
33) HINGE, SWIM LADDER (2x)
34) LATCH, STORAGE LOCKER (3x)
35) VENT, DIESEL (2x)
36) DECK FILL, DIESEL
37) WHEEL
38) PEDESTAL
39) LEWMAR ESCAPE HATCH, 20" X 20"
40) COCKPIT TABLE
41) GATE (2x)
42) PLEXIGLASS WINDOW (4x)
43) DIAMOND PADEYE
44) LEWMAR HATCH, 19" x 19" (2x)
45) DECK PUMPOUT, WASTE
46) MASTSTEP ORGANIZER
47) LEWMAR HATCH, 12" x 12" (1x)
48) LEWMAR TRAPEZIOD HATCH, 21" x 26'
49) ANCHOR LOCKER HANDLE
50) 12" CLEAT (6x)
51) PADEYE
52) 10" CLEAT
53) WINDLASS
54) HELM SEAT LATCH (2x)
55) PIANO HINGE (STORAGE LOCKER)

Catalina Yachts

21200 VICTORY BLVD.
WOODLAND HILLS, CA.
91367-(818)884-7700

TITLE: DECK PLAN PARTS LIST

BOAT: CATALINA 350		DRAWING NO: 350-25050-1		
DESIGNED BY:	CHECKED BY:	SCALE: NONE	SIZE: A	SHEET: 2/2
DRAWN BY: C.D.	APPROVED BY:	DATE: 01/15/02		

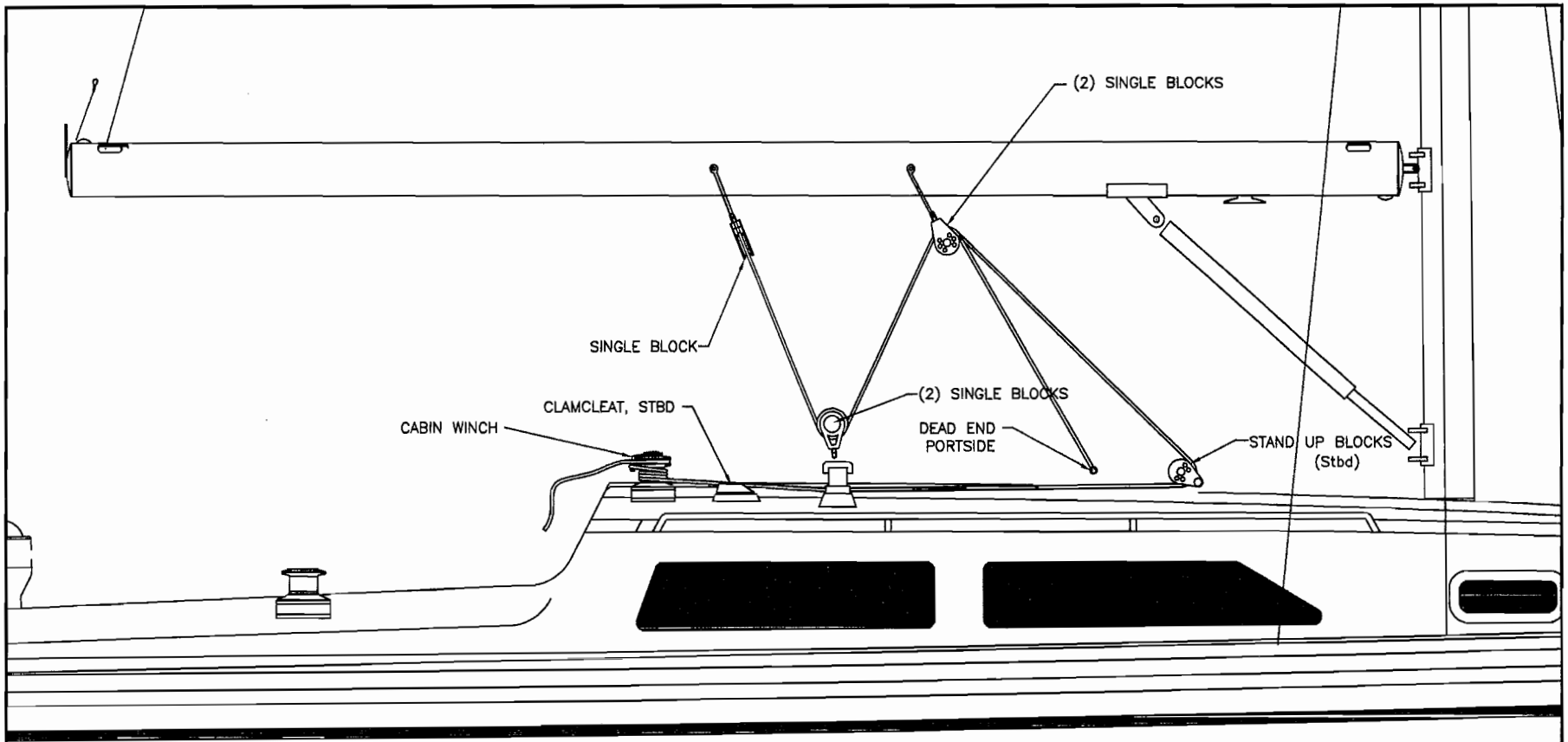

PROPRIETARY INFORMATION
THE DESIGNS, INFORMATION, AND DATA CONTAINED HEREIN ARE PROPRIETARY AND ARE SUBMITTED IN CONFIDENCE, AND SHALL NOT BE DISCLOSED, USED, OR DUPLICATED, IN WHOLE OR IN PART, FOR ANY PURPOSES WHATSOEVER, WITHOUT THE PRIOR WRITTEN PERMISSION OF CATALINA YACHTS, 21200 VICTORY BLVD. WOODLAND HILLS, CALIFORNIA 91367. THIS LEGEND SHALL BE MARKED ON ANY REPRODUCTIONS HEREOF IN WHOLE OR IN PART. RECEIPT OF THIS DOCUMENT SHALL BE DEEMED TO BE AN ACCEPTANCE OF THE CONDITIONS SPECIFIED HEREIN.

UNLESS OTHERWISE SPECIFIED DIMENSIONS ARE IN INCHES
GENERAL TOLERANCES
ANGLES : ±0.5°
X.X : ±0.1
X.XX : ±0.01
X.XXX : ±0.005
SURFACE FINISH: 63
DO NOT SCALE DRAWING

Catalina Yachts
7200 BRYAN DIARY RD.
LARGO, FL. 33777
(727) 544-6681

TITLE: MAINSHEET SYSTEM

BOAT: CATALINA 350		DRAWING NO: 350-35050-0	
DESIGNED BY:	CHECKED BY:	SCALE: NONE	SIZE: A / SHEET: 1/1
DRAWN BY: C.D.	APPROVED BY:	DATE: 02/14/02	

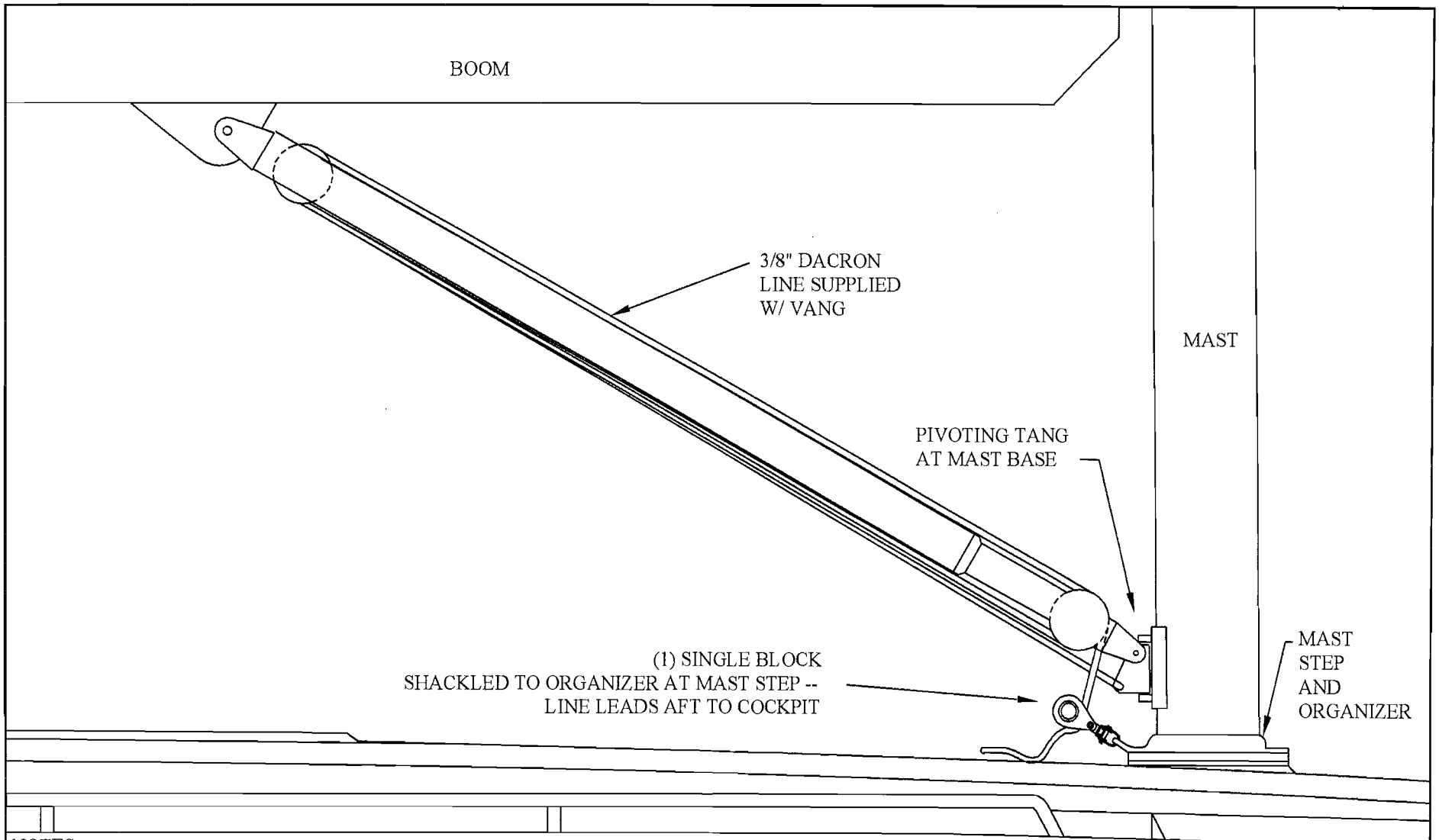

NOTES:

LINE IS TIED OFF ON PIVOTING TANG AT MAST BASE AND LED THROUGH THE DOUBLE BLOCKS AT EITHER END OF THE BOOM VANG. THE LINE IS LED BACK DOWN TO THE SINGLE BLOCK AT THE ORGANIZER AND THEN TO A STOPPER.

PROPRIETARY INFORMATION

THE DESIGNS, INFORMATION, AND DATA CONTAINED HEREIN ARE PROPRIETARY AND ARE SUBMITTED IN CONFIDENCE, AND SHALL NOT BE DISCLOSED, USED, OR DUPLICATED, IN WHOLE OR IN PART, FOR ANY PURPOSES WHATSOEVER, WITHOUT THE PRIOR WRITTEN PERMISSION OF CATALINA YACHTS, 21200 VICTORY BLVD. WOODLAND HILLS, CALIFORNIA 91367. THIS LEGEND SHALL BE MARKED ON ANY REPRODUCTIONS HEREOF IN WHOLE OR IN PART. RECEIPT OF THIS DOCUMENT SHALL BE DEEMED TO BE AN ACCEPTANCE OF THE CONDITIONS SPECIFIED HEREIN.

UNLESS OTHERWISE SPECIFIED DIMENSIONS ARE IN INCHES

GENERAL TOLERANCES
ANGLES : ±0.5°
X.X : ±0.1
X.XX : ±0.01
X.XXX : ±0.005
SURFACE FINISH: 63

DO NOT SCALE DRAWING

Catalina Yachts
7200 BRYAN DAIRY RD.
LARGO, FL. 33777
(727)544-6681

SCALE: NONE	APPROVED BY:	DRAWN BY: C.D.
DATE: 04/15/02		REVISED

BOOM VANG- FURLING & STANDARD CHARLESTON SPAR

BOAT:	DRAWING NUMBER
CATALINA 350	350-38051-0

REV	DESCRIPTION	DATE

OPTIONAL EQUIPMENT:

(1) SECOND REEFING LINE
(1) 150% GENOA FOR FURLING W/UV PROTECTION IN LIEU OF 135%
(1) CRUISING SPINNAKER GEAR:
- (2) SHEET BLOCKS W/SNAP SHACKLE
- (2) PADEYES FOR SHEET BLOCKS
- (2) SHEETS
- (1) CRUISING SPINNAKER
- (1) TACK BLOCK W/ SNAP SHACKLE
- (1) CRANE BLOCK W/ "D" SHACKLE
- (1) MAST HEAD CRANE

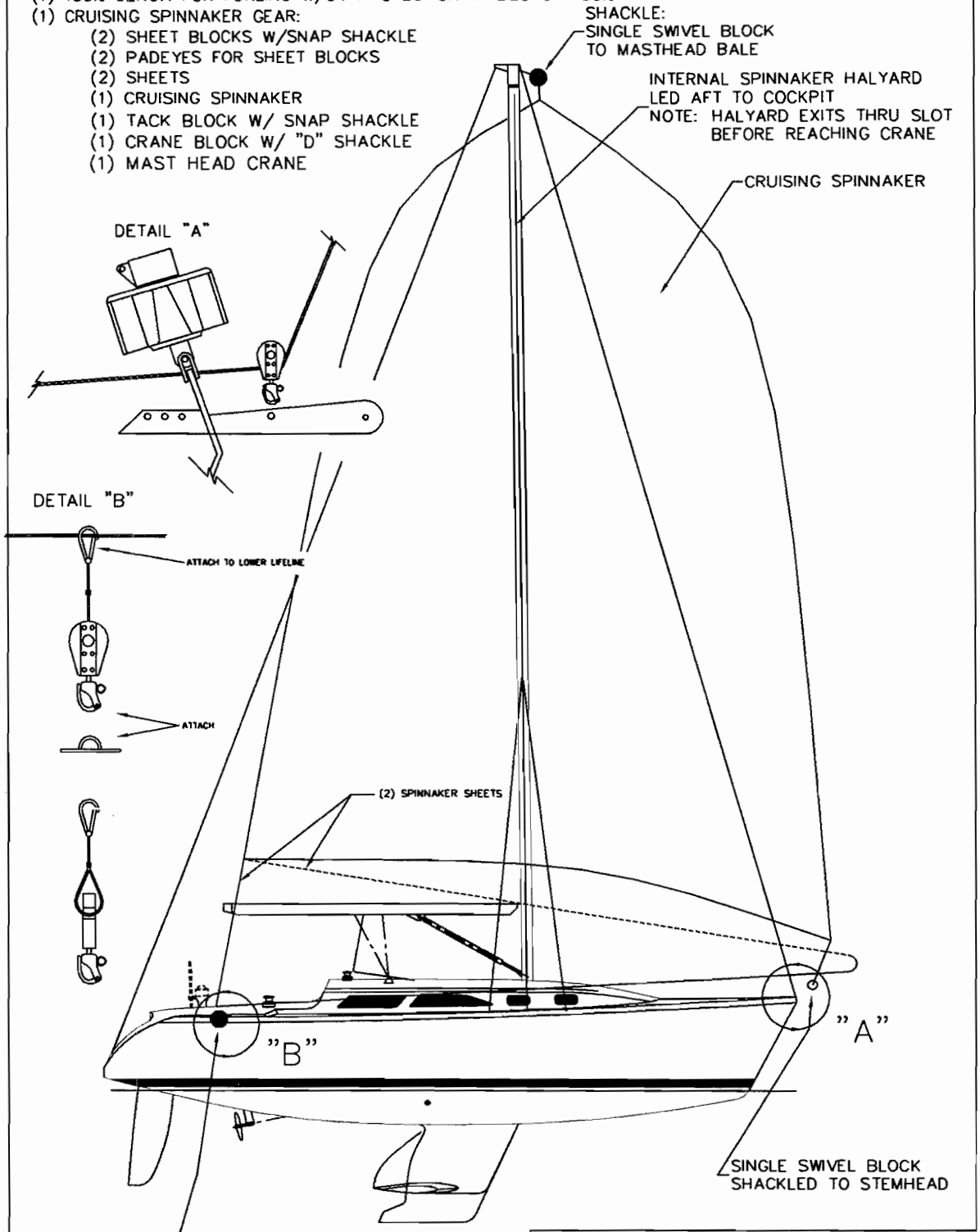

PROPRIETARY INFORMATION
THE DESIGNS, INFORMATION, AND DATA CONTAINED HEREIN ARE PROPRIETARY AND ARE SUBMITTED IN CONFIDENCE, AND SHALL NOT BE DISCLOSED, USED, OR DUPLICATED, IN WHOLE OR IN PART, FOR ANY PURPOSES WHATSOEVER, WITHOUT THE PRIOR WRITTEN PERMISSION OF CATALINA YACHTS, 21200 VICTORY BLVD. WOODLAND HILLS, CALIFORNIA 91367. THIS LEGEND SHALL BE MARKED ON ANY REPRODUCTIONS HEREOF IN WHOLE OR IN PART. ACCEPTANCE OF THIS DOCUMENT SHALL BE DEEMED TO BE AN ACCEPTANCE OF THE CONDITIONS SPECIFIED HEREIN.

UNLESS OTHERWISE SPECIFIED DIMENSIONS ARE IN INCHES
GENERAL TOLERANCES
ANGLES : ±0.5°
X.X : ±0.1
X.XX : ±0.01
X.XXX : ±0.005
SURFACE FINISH: 63
DO NOT SCALE DRAWING

Catalina Yachts
7200 BRYAN DAIRY RD.
LARGO, FL. 33777
(727)544-6681

SCALE: NONE	APPROVED BY:	DRAWN BY: C.D.
DATE: 4/23/02	FILE:	REV. BY: E.W.S 4.9.02

TITLE: SPINNAKER OPTION RIGGING | SIZE: B | SHEET: 1/1

BOAT: CATALINA 350 | DRAWING NUMBER: 350-35053-0

ELECTRICAL DC 12 VOLT:

BATTERIES:

Your electrical system is powered by 2 marine grade, 12 volt, deep cycle batteries. Attention should be given to maintaining the proper level of distilled water. Do not overfill. The batteries are located under the settee, forward of the galley.

The batteries are provided with a tie down to prevent tipping over at extreme angles of heel. Be sure these tie downs are fastened securely.

With proper care, the batteries installed in your Catalina will provide long and reliable service. Proper care is not difficult if a few basic points are kept in mind.

Your batteries should be checked periodically for any cracks or breaks in the case or cover and any cracks in the sealing compound. If there is any damage, the battery should be replaced at once.

WARNING: The electrolyte in a battery is a solution of sulfuric acid. If any should come in contact with the eyes, rinse immediately with large amounts of fresh water and seek medical attention. Electrolyte spilled on skin should be rinsed well with fresh water also. Even a small amount of electrolyte spilled on clothing will destroy the clothing.

ELECTROLYTE LEVEL:

The electrolyte level in a battery should never be allowed to fall low enough to expose the plates. This not only results in a loss of battery capacity while the battery is low, but will cause hardening of the active material on the battery plates. This will result in a permanent loss of battery capacity.

CAUTION: Use only pure distilled water to replenish electrolyte levels. The water from many city water supply systems is unsatisfactory for battery use.

CHARGING THE BATTERY:

Before adding water, a hydrometer reading of the battery should be taken. If the reading shows the battery to be above 1.225 specific gravity, the battery has a sufficient charge. If the reading is below 1.225, the battery should be removed for bench charge.

Once charged, the battery should have a specific gravity of at least 1.260. If this cannot be reached, the battery should be inspected by a battery supplier.

The batteries should be checked often to ensure that they do not run down. Check that all battery cells keep an even fluid level and that the fluid is about 3/8" above the top of the separators.

If one or two cells have lower fluid levels, it is a good indicator that something is wrong with the battery, and it should be checked.

DISCHARGED STATE:

Leaving a battery in a discharged state for any length of time can also result in a permanent loss of capacity for the battery. Since it will freeze at relatively low temperatures, leaving it in the cold weather can destroy the battery.

CLEAN CONNECTIONS:

Keep battery connections clean and tight. A cupful of strong baking soda solution and a toothbrush will clean corrosion from the terminals and neutralize any spilled acid (do not allow any of the solution to enter the battery cells). A coating of petroleum jelly on the battery terminals will inhibit corrosion.

MAIN BATTERY SWITCH:

The circulator battery switch has the markings 1, 2 and "ALL" as well as "OFF". You can selectively charge the battery with the engine alternator. Many experienced sailors use battery #1 for electrical lighting needs and keep #2 in reserve for starting the engine.

When the engine is running, never select the "OFF" position or the alternator diodes will be burned out.

If both batteries are of equal charge, keep the selector switch on "ALL" position, and use "ALL" to start the engine if both batteries are low.

ELECTRICAL SYSTEM:

The Catalina is equipped with a standard 12-volt DC system and 110-115 volt AC system. The wiring is run to prevent chaffing or contact with water, where possible, and is supported as needed. We recommend that you check all the connections at least once a year for corrosion, loose fittings, etc.

DC - 12 VOLT SYSTEM:

The DC system is powered by two deep cycle batteries located under the settee seat forward of the head.

MAIN DC CIRCUIT BREAKER:

Operating switches for lights and accessories are located on the main switch panel. The main circuit breaker will automatically trip to the OFF position in the event of an overload to the circuit. If the breaker trips to OFF, the cause should be determined and any necessary repairs should be made before repositioning the circuit breaker switch to ON.

Before purchasing any electrical accessories for your boat, ensure that they are compatible to a negative ground system.

IMPORTANT: Be sure to disconnect the batteries and disconnect AC shore power cord before opening the panel, or severe injuries may result.

All wires, terminals and connections should be checked periodically for loose connections or corrosions which could cause high resistance, electrical sparks or fires. The engine accessory wiring should also be checked at this time.

NAVIGATION LIGHTS:

Navigation lights should be used in accordance with the rules and regulations of the waters in which you intend to sail.

Generally, navigation lights should be used from dusk to dawn in all weather conditions. It is advisable to use the navigation lights any time visibility is poor.
Your Catalina Yacht is equipped with the following navigation lights:

a) Red and Green 112.5° combination running lights mounted on the bow pulpit.

b) White 135° stern running light mounted on the stern pulpit.

c) White 225° steaming light mounted on the mast.

d) White 360° anchor light mounted on the masthead.

(a) and (b) are wired to the running light switch on the panel. (2) is wired to the steaming light switch, and (d) is wired to the anchor light switch.

When underway by sail, the bow running light and stern running light must be used. When underway by power, the steaming light, bow and stern running lights must be on. At anchor, the anchor light should be on, the running (a) and (b) and steaming (2)should be off.

NO	REVISION	DATE
1	DELETED CARBON MONOXIDE DETECTOR.	03/25/01
2	DELETED LPG SWITCH. FIRST BOAT #4.	05/03/02
3	ADDED TANK LEVEL INDICATOR FIRST BOAT # 001	08/20/02

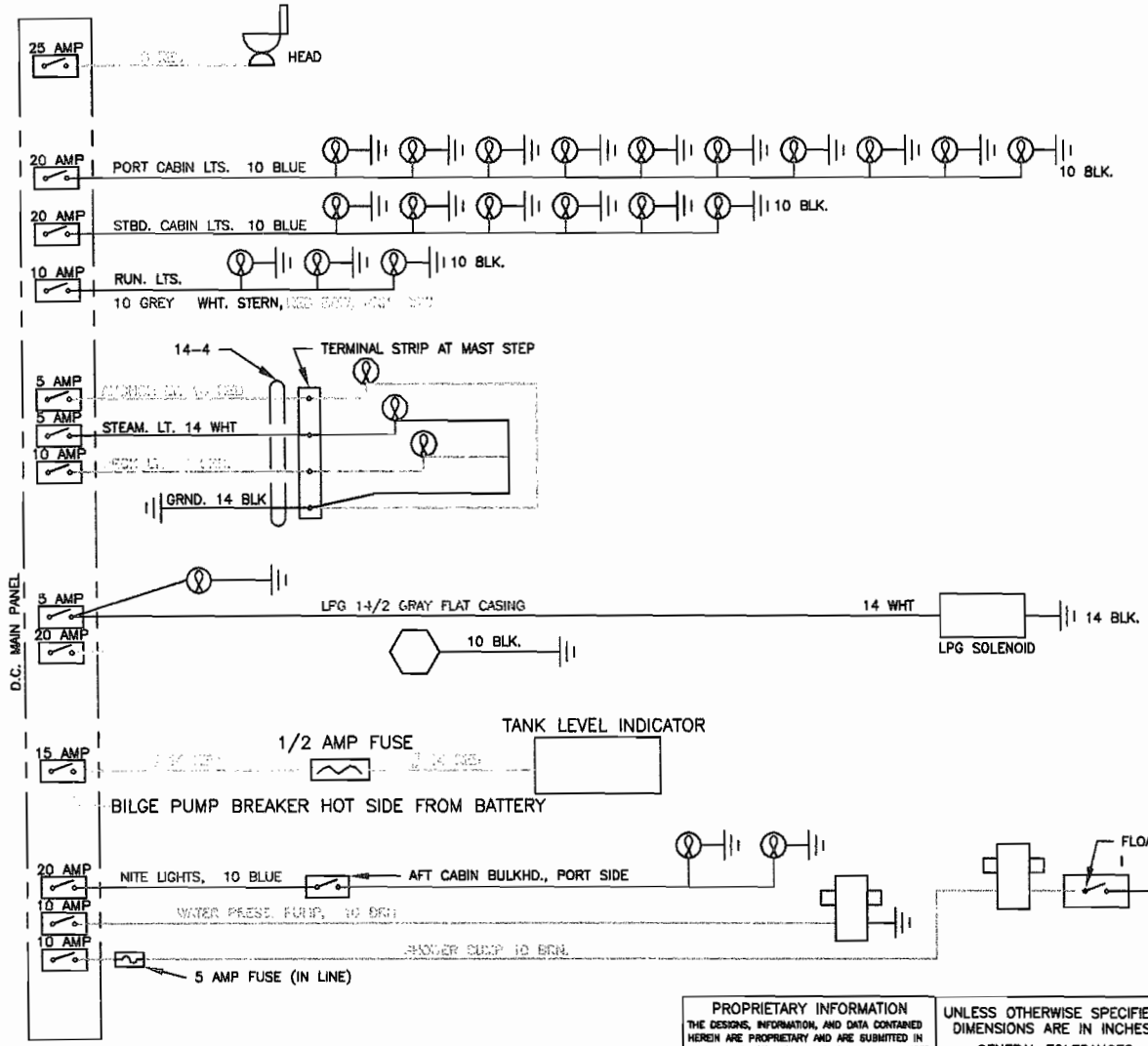

PROPRIETARY INFORMATION

THE DESIGNS, INFORMATION, AND DATA CONTAINED HEREIN ARE PROPRIETARY AND ARE SUBMITTED IN CONFIDENCE, AND SHALL NOT BE DISCLOSED, USED, OR DUPLICATED, IN WHOLE OR IN PART, FOR ANY PURPOSES WHATSOEVER, WITHOUT THE PRIOR WRITTEN PERMISSION OF CATALINA YACHTS, 21200 VICTORY BLVD. WOODLAND HILLS, CALIFORNIA 91367. THIS LEGEND SHALL BE MARKED ON ANY REPRODUCTIONS HEREOF IN WHOLE OR IN PART. RECEIPT OF THIS DOCUMENT SHALL BE DEEMED TO BE AN ACCEPTANCE OF THE CONDITIONS SPECIFIED HEREIN.

UNLESS OTHERWISE SPECIFIED DIMENSIONS ARE IN INCHES

GENERAL TOLERANCES
ANGLES : ±0.5°
X.X : ±0.1
X.XX : ±0.01
X.XXX : ±0.005
SURFACE FINISH: 63
DO NOT SCALE DRAWING

Catalina Yachts
7200 BRYAN DIARY RD.
LARGO, FL. 33777
(727) 544-6681

TITLE: 12 VOLT D.C. WIRING SCHEMATIC

BOAT: CATALINA 350		DRAWING NO: 350-72050-3			
DESIGNED BY:	CHECKED BY:	SCALE: N/A	SIZE	SHEET	
DRAWN BY: C.D.	APPROVED BY:	DATE: 01/09/02	B	1/1	

REV	DESCRIPTION	DATE	APPROVAL

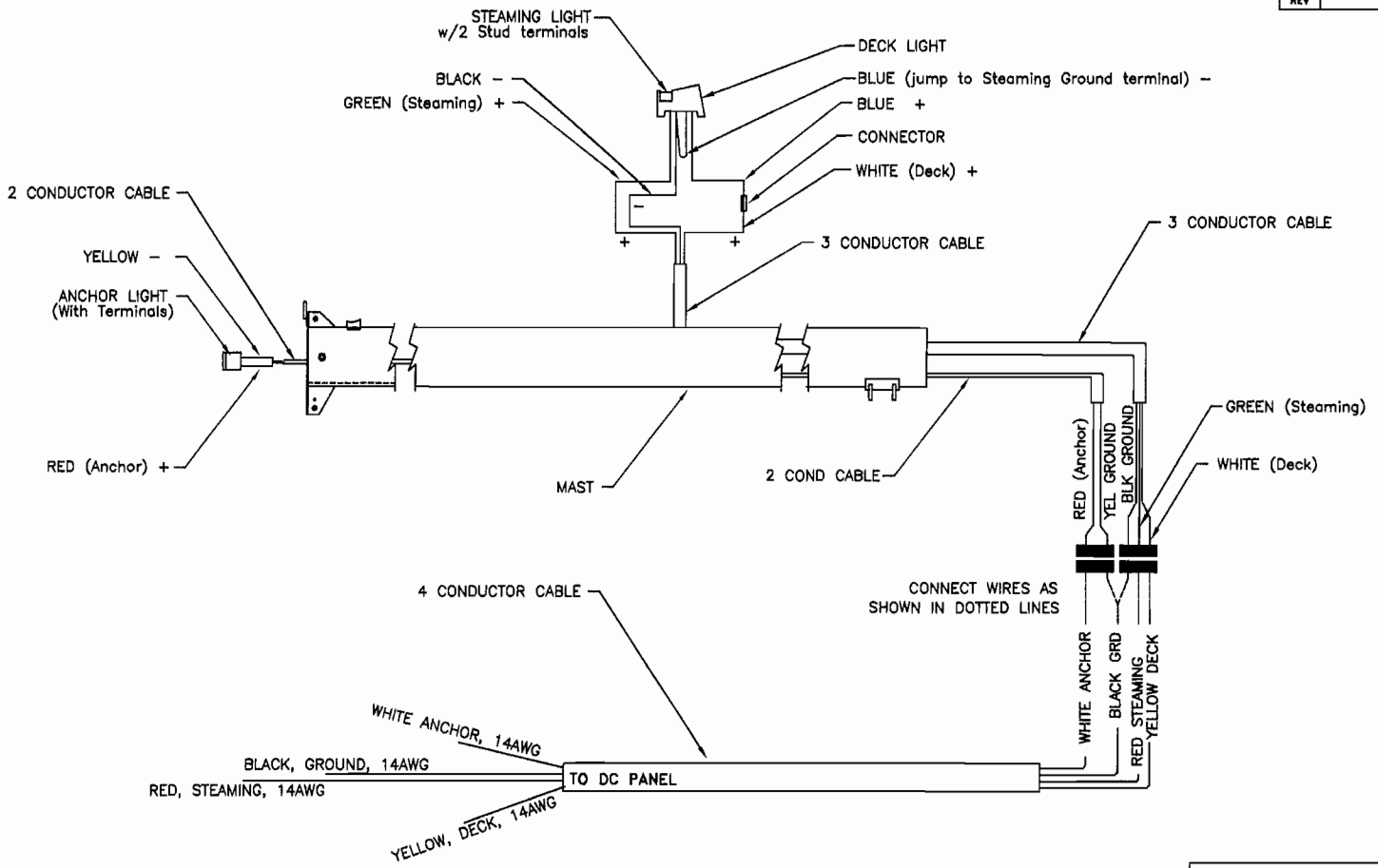

5

NOTES: (UNLESS OTHERWISE SPECIFIED)
1. INTERPRET DRAWING IN ACCORDANCE WITH STANDARDS

PROPRIETARY INFORMATION
THE DRAWING, INFORMATION, AND DATA CONTAINED HEREIN ARE PROPRIETARY AND ARE SUBMITTED IN CONFIDENCE, AND SHALL NOT BE DISCLOSED, USED, OR DUPLICATED, IN WHOLE OR IN PART, FOR ANY PURPOSES WHATSOEVER, WITHOUT THE PRIOR WRITTEN PERMISSION OF CATALINA YACHTS, 21200 VICTORY BLVD, WOODLAND HILLS, CALIFORNIA 91367. THIS LEGEND SHALL BE IMPRINTED ON ANY REPRODUCTIONS HEREOF IN WHOLE OR IN PART. RECEIPT OF THIS DOCUMENT SHALL BE DEEMED TO BE AN ACCEPTANCE OF THE CONDITIONS SPECIFIED HEREIN.

UNLESS OTHERWISE SPECIFIED
DIMENSIONS ARE IN INCHES
GENERAL TOLERANCES
ANGLES : ±0.5°
X.X : ±0.1
X.XX : ±0.01
X.XXX : ±0.005
SURFACE FINISH: 63√
DO NOT SCALE DRAWING

Catalina Yachts
7200 BRYAN DIARY RD.
LARGO, FL. 33777
(727) 544-6651

TITLE: MAST LIGHT WIRING

BOAT	DRAWING NO.
CATALINA 310	310-72052-0

DESIGNED BY:	CHECKED BY:	SCALE:	SIZE	SHEET
DRAWN BY: C.D.	APPROVED BY:	DATE: 3/12/02	B	1/1

ELECTRICAL AC - 110-115 VOLT SYSTEM:

The 110V AC power system depends upon the boat being connected to 110V-30 amp shore power connector. The factory option offers a 50' shore power cable which should be plugged into the 110V inlet on he boat (located on the transom) and into the shore power connector on the dock.

IMPORTANT: TO MINIMIZE SHOCK AND FIRE HAZARDS:

1. Turn off the boat's shore connection switch before connecting or disconnecting the shore power cable.
2. Connect the shore power cable at the boat first.
3. If the polarity warning indicator is activated, disconnect the cable immediately.
4. Disconnect the shore power cable at the shore outlet first.
5. Close the shore power inlet cover tightly.
6. DO NOT ALTER THE SHORE POWER CABLE CONNECTORS IN ANY WAY. SEVERE INJURY MAY OCCUR.

Care should be taken to support the shore power cable at both ends to allow sufficient slack to avoid pulling. Remember to allow for the tide.

The master breaker switch is 30 amp, two pole type, located in the port stern locker. There are five (5) 110V outlets. Be certain that all 110 volt appliances, other than lamps, have an adequate grounding connector. Wet feet or moist atmosphere increases the potential shock hazard.

There is a reverse polarity indicator on the panel. With all switches off, attach the power cable to the inlet. Next, attach the power cable to the dock outlet. If the reverse polarity light comes on, DISCONNECT THE CORD IMMEDIATELY! This indicates a reverse polarity situation which is very dangerous.

WARNING: Do not open the electrical panel for any purpose with the shore power cable connected to the dock. 110 volt wiring is exposed when the panel is open. Contact with the 110 volt wiring can cause electrocution. Electricity is dangerous. Even when safety devices are present, handle with care and use reasonable caution.

GROUND FAULT INTERRUPTER:

G.F.I. receptacles are designed to provide protection against electrical shock hazards due to line-to-ground faults. Although the G.F.I. receptacle does not limit the magnitude of the fault current, and therefore cannot prevent electrical shock, it does limit the duration of the shock to a period considered safe for normal healthy persons. G.F.I. receptacles will provide protection against ground faults only. They will not protect against overload or short circuits. There is no known device that will guard against the electric shock hazard resulting from contact with both the "hot" and neutral wires of the electrical circuit.

The 110V AC outlets in the Catalina Yacht are protected by the G.F.I. receptacle. If there is a power failure which does not affect the fuse or breaker serving these outlets, unplug all cord-

connected appliances from the protected outlets, unplug all cord-connected appliances from the protected outlets and restore power by pressing the red RESET button on the receptacle. Push the RESET back in and reconnect the appliances one at a time. Any defective appliance will trip the button and should be repaired at once.

If the appliances are all disconnected, and the RESET button will not stay in, call a qualified electrician. If the RESET button does not pop out when the blue TEST button is pressed, PROTECTION IS LOST. Do not use any of the outlets and call a qualified electrician immediately.

IMPORTANT: Your Ground Fault Interrupter Circuit should be tested regularly. Use the following steps:

1. Push the blue TEST button. The red RESET button should pop out. Power is now out at that outlet indicating that the circuit is operating properly.

2. If the button does not pop out when testing, do not use that outlet. Protection is lost and a qualified electrician should be called.

3. To restore power, push the RESET button.

PREVENTATIVE MAINTENANCE:

This consists of periodic inspection and protection against any damage created by the elements. Electrical systems are adversely affected by moisture and a salt-air environment.

The system can be protected by the application of aerosol sprays such as WD-40 or CRC. All wire harnesses and connections should be checked periodically to ensure that fastenings are secured and that everything is clean with no sign of damage or corrosion. It is extremely important that all connections be kept clean.

WARNING: Do not perform any maintenance or repair on a live circuit. Do not turn the main DC switch off while the engine is running. This could cause damage to the alternator.

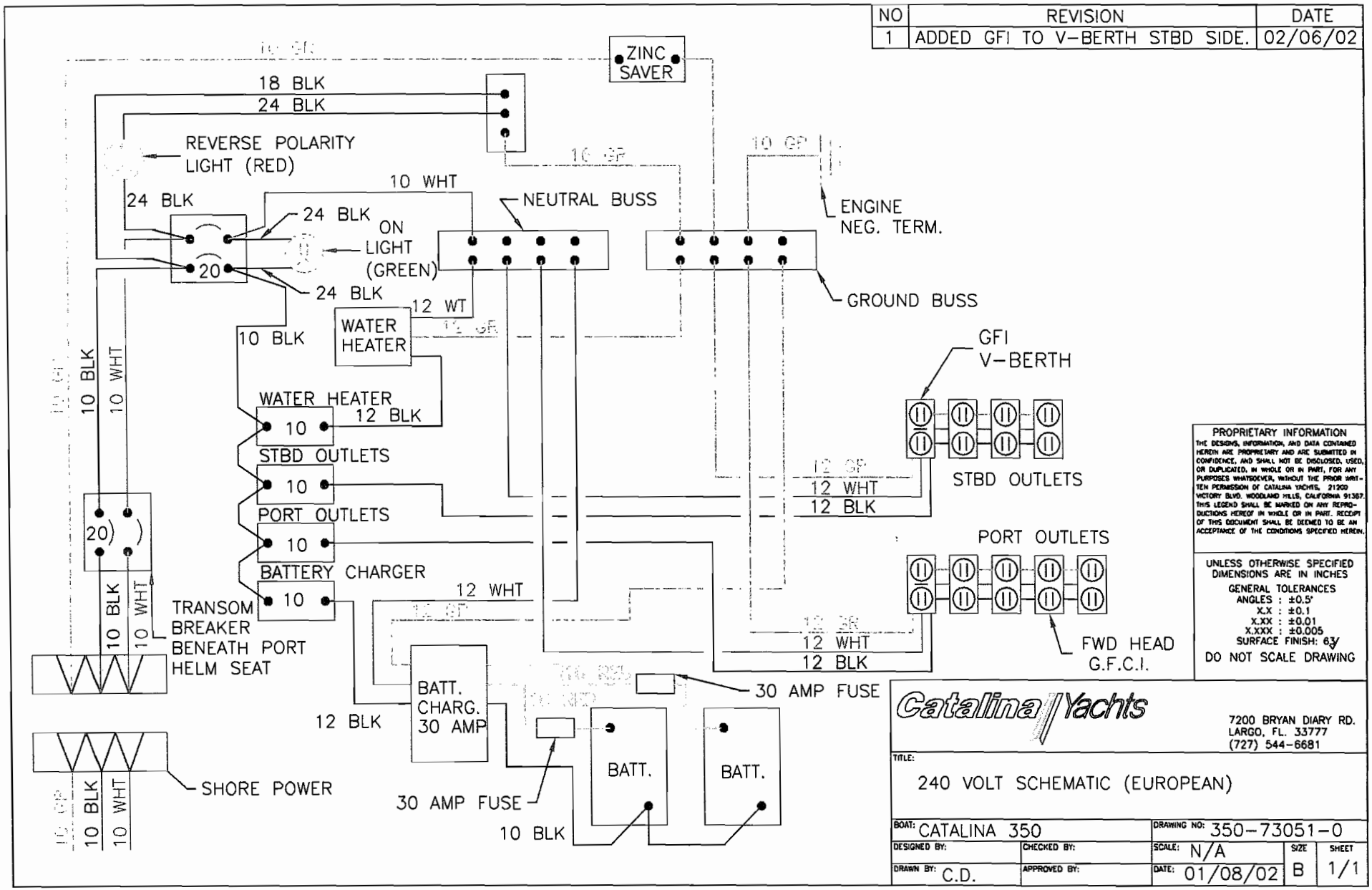

NO	REVISION	DATE
1	ADDED GFI TO V-BERTH STBD SIDE.	02/06/02

PROPRIETARY INFORMATION

THE DESIGNS, INFORMATION, AND DATA CONTAINED HEREIN ARE PROPRIETARY AND ARE SUBMITTED IN CONFIDENCE, AND SHALL NOT BE DISCLOSED, USED, OR DUPLICATED, IN WHOLE OR IN PART, FOR ANY PURPOSES WHATSOEVER, WITHOUT THE PRIOR WRITTEN PERMISSION OF CATALINA YACHTS, 21200 VICTORY BLVD. WOODLAND HILLS, CALIFORNIA 91367. THIS LEGEND SHALL BE MARKED ON ANY REPRODUCTIONS HEREOF IN WHOLE OR IN PART. RECEIPT OF THIS DOCUMENT SHALL BE DEEMED TO BE AN ACCEPTANCE OF THE CONDITIONS SPECIFIED HEREIN.

UNLESS OTHERWISE SPECIFIED DIMENSIONS ARE IN INCHES

GENERAL TOLERANCES
ANGLES : ±0.5°
X.X : ±0.1
X.XX : ±0.01
X.XXX : ±0.005
SURFACE FINISH: 63
DO NOT SCALE DRAWING

Catalina Yachts
7200 BRYAN DIARY RD.
LARGO, FL. 33777
(727) 544-6681

TITLE: 240 VOLT SCHEMATIC (EUROPEAN)

BOAT: CATALINA 350		DRAWING NO: 350-73051-0	
DESIGNED BY:	CHECKED BY:	SCALE: N/A	SIZE: B / SHEET: 1/1
DRAWN BY: C.D.	APPROVED BY:	DATE: 01/08/02	

NO	REVISION	DATE
1	ADDED GFI TO V-BERTH STBD SIDE.	02/06/02
2	REVISED BATTERY CHARGER FUSE, WAS 30	02/20/02

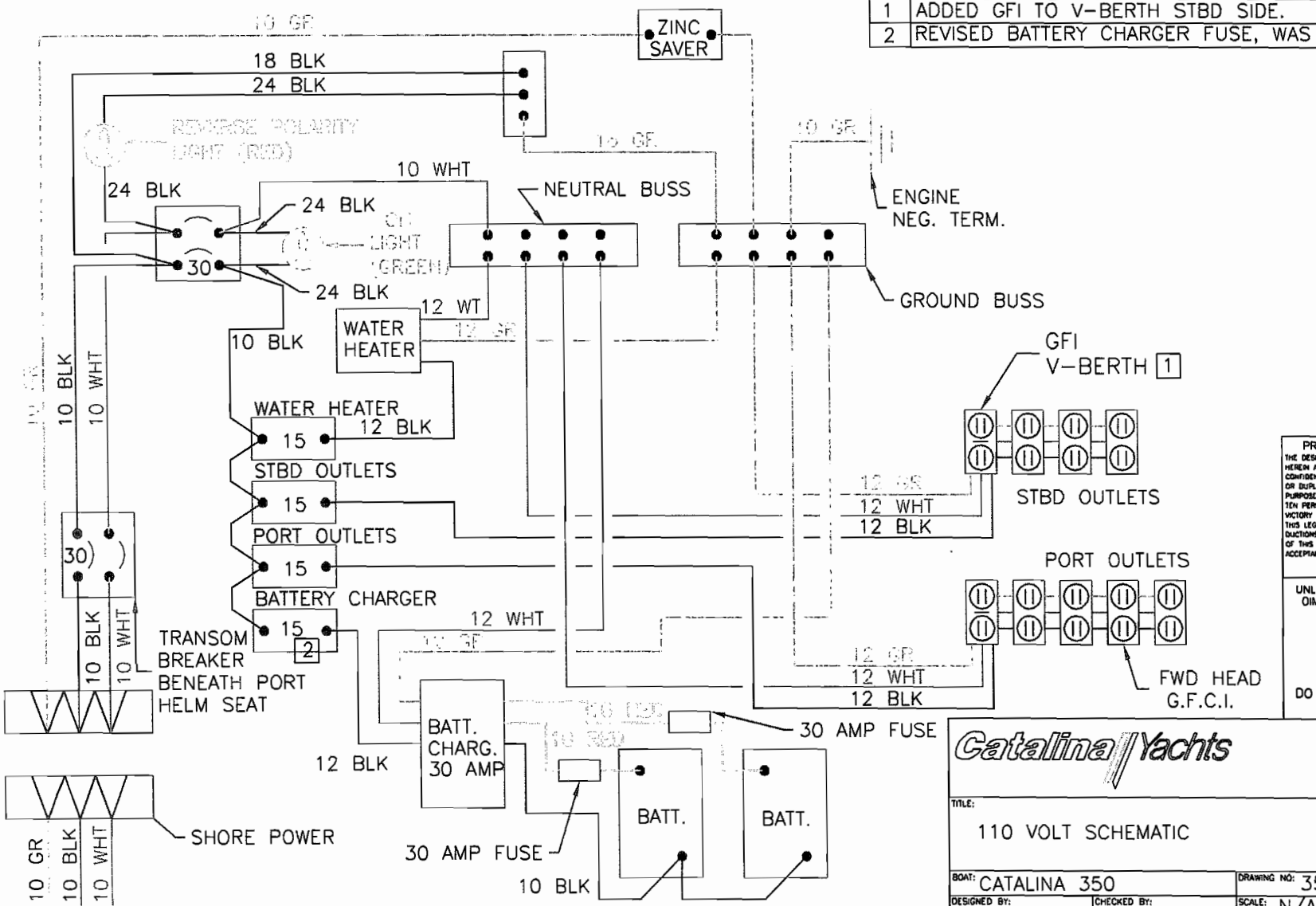

PROPRIETARY INFORMATION

THE DESIGNS, INFORMATION, AND DATA CONTAINED HEREIN ARE PROPRIETARY AND ARE SUBMITTED IN CONFIDENCE, AND SHALL NOT BE DISCLOSED, USED, OR DUPLICATED, IN WHOLE OR IN PART, FOR ANY PURPOSES WHATSOEVER, WITHOUT THE PRIOR WRITTEN PERMISSION OF CATALINA YACHTS, 21200 VICTORY BLVD. WOODLAND HILLS, CALIFORNIA 91367. THIS LEGEND SHALL BE MARKED ON ANY REPRODUCTIONS HEREOF IN WHOLE OR IN PART. RECEIPT OF THIS DOCUMENT SHALL BE DEEMED TO BE AN ACCEPTANCE OF THE CONDITIONS SPECIFIED HEREIN.

UNLESS OTHERWISE SPECIFIED DIMENSIONS ARE IN INCHES
GENERAL TOLERANCES
ANGLES : ±0.5°
X.X : ±0.1
X.XX : ±0.01
X.XXX : ±0.005
SURFACE FINISH: 63
DO NOT SCALE DRAWING

Catalina Yachts
7200 BRYAN DIARY RD.
LARGO, FL. 33777
(727) 544-6681

TITLE: 110 VOLT SCHEMATIC

BOAT: CATALINA 350		DRAWING NO: 350-73050-2			
DESIGNED BY:	CHECKED BY:	SCALE: N/A	SIZE	SHEET	
DRAWN BY: C.D.	APPROVED BY:	DATE: 01/08/02	B	1/1	

NO	REVISION	DATE
1	ADDED GFI TO V-BERTH STBD SIDE.	02/06/02
2	REVISED BATTERY CHARGER FUSE, WAS 30	02/20/02
3	ADDED AIR CONDITIONING	08/01/02

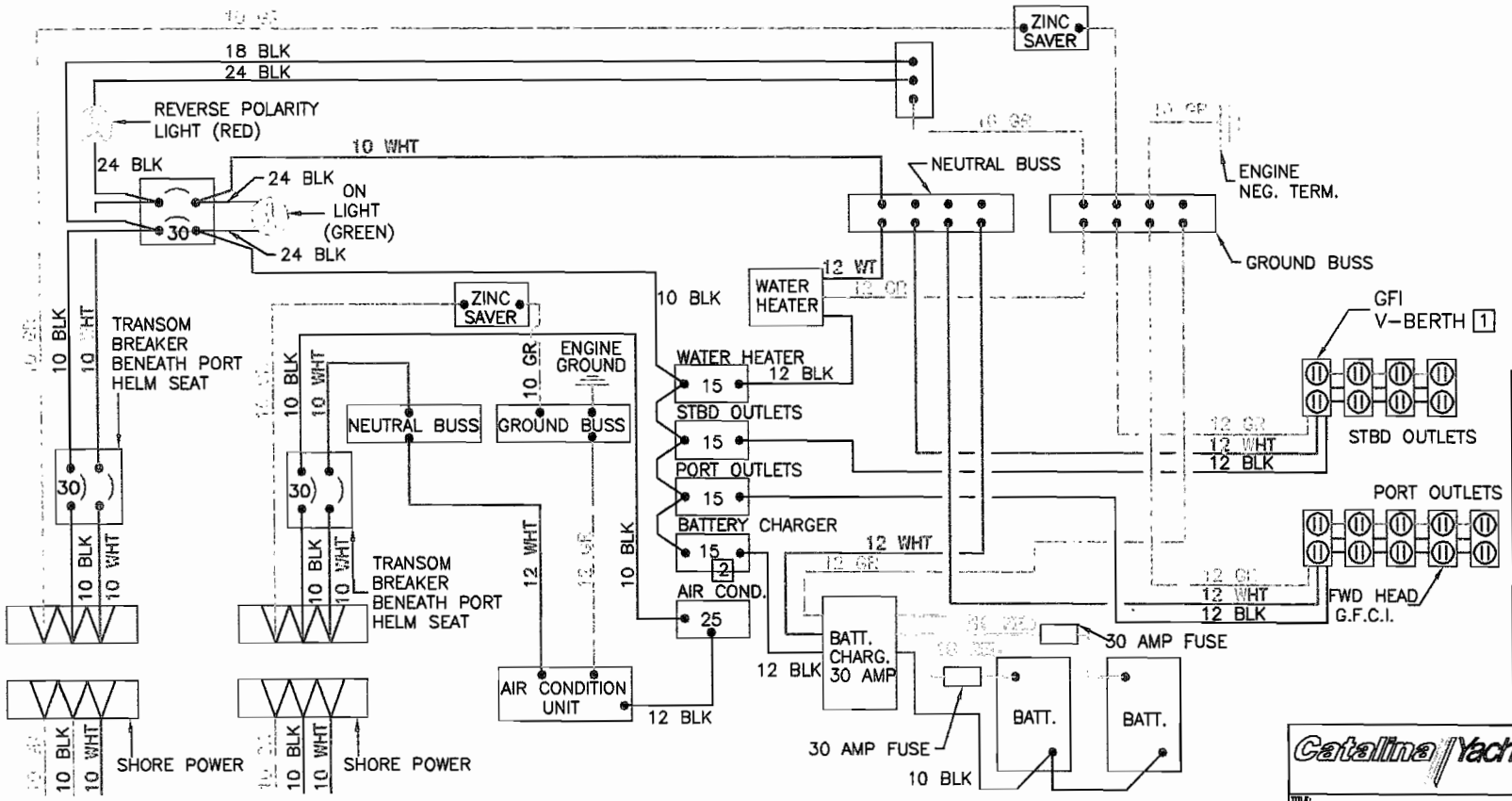

PROPRIETARY INFORMATION

THE DESIGNS, INFORMATION, AND DATA CONTAINED HEREIN ARE PROPRIETARY AND ARE SUBMITTED IN CONFIDENCE, AND SHALL NOT BE DISCLOSED, USED, OR DUPLICATED, IN WHOLE OR IN PART, FOR ANY PURPOSES WHATSOEVER, WITHOUT THE PRIOR WRITTEN PERMISSION OF CATALINA YACHTS. 21200 VICTORY BLVD. WOODLAND HILLS, CALIFORNIA 91367. THIS LEGEND SHALL BE MARKED ON ANY REPRODUCTIONS HEREOF IN WHOLE OR IN PART. RECEIPT OF THIS DOCUMENT SHALL BE DEEMED TO BE AN ACCEPTANCE OF THE CONDITIONS SPECIFIED HEREIN.

UNLESS OTHERWISE SPECIFIED DIMENSIONS ARE IN INCHES

GENERAL TOLERANCES
ANGLES : ±0.5°
X.X : ±0.1
X.XX : ±0.01
X.XXX : ±0.005
SURFACE FINISH: 63

DO NOT SCALE DRAWING

Catalina Yachts
7200 BRYAN DIARY RD.
LARGO, FL. 33777
(727) 544-6881

TITLE:
110 VOLT SCHEMATIC
WITH AIR CONDITION

BOAT: CATALINA 350		DRAWING NO: 350-73050-3	
DESIGNED BY:	CHECKED BY:	SCALE: N/A	SIZE: B
DRAWN BY: C.D.	APPROVED BY:	DATE: 01/08/02	SHEET: 1/1

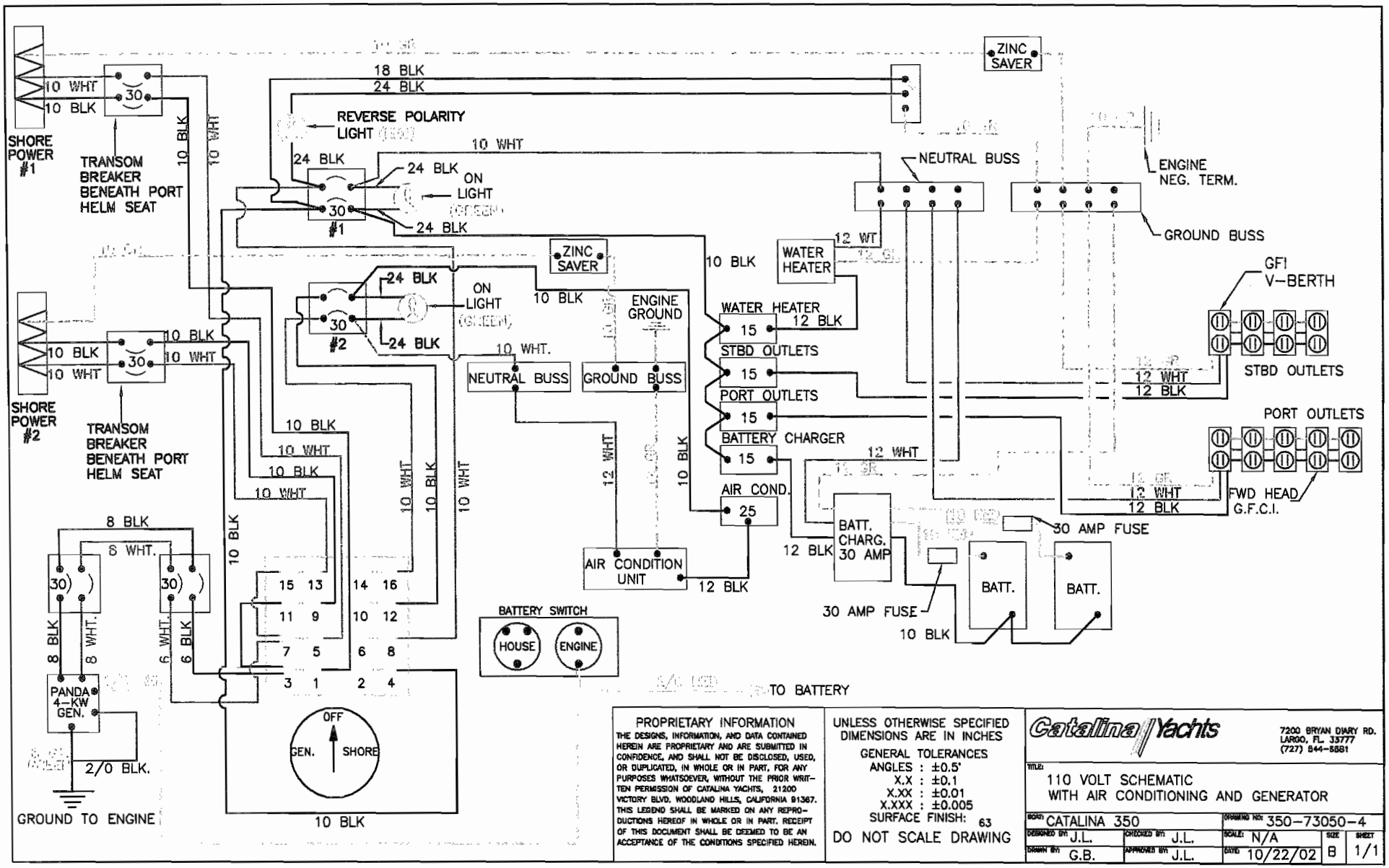

PROPRIETARY INFORMATION
THE DESIGNS, INFORMATION, AND DATA CONTAINED HEREIN ARE PROPRIETARY AND ARE SUBMITTED IN CONFIDENCE, AND SHALL NOT BE DISCLOSED, USED, OR DUPLICATED, IN WHOLE OR IN PART, FOR ANY PURPOSES WHATSOEVER, WITHOUT THE PRIOR WRITTEN PERMISSION OF CATALINA YACHTS, 21200 VICTORY BLVD, WOODLAND HILLS, CALIFORNIA 91367. THIS LEGEND SHALL BE MARKED ON ANY REPRODUCTIONS HEREOF IN WHOLE OR IN PART. RECEIPT OF THIS DOCUMENT SHALL BE DEEMED TO BE AN ACCEPTANCE OF THE CONDITIONS SPECIFIED HEREIN.

UNLESS OTHERWISE SPECIFIED DIMENSIONS ARE IN INCHES
GENERAL TOLERANCES
ANGLES : ±0.5°
X.X : ±0.1
X.XX : ±0.01
X.XXX : ±0.005
SURFACE FINISH: 63
DO NOT SCALE DRAWING

Catalina Yachts
7200 BRYAN DIARY RD.
LARGO, FL. 33777
(727) 544-5881

TITLE:
110 VOLT SCHEMATIC
WITH AIR CONDITIONING AND GENERATOR

BOAT: CATALINA 350			DRAWING NO: 350-73050-4		
DESIGNED BY: J.L.	CHECKED BY: J.L.	SCALE: N/A	SIZE: B	SHEET: 1/1	
DRAWN BY: G.B.	APPROVED BY: J.L.	DATE: 10/22/02			

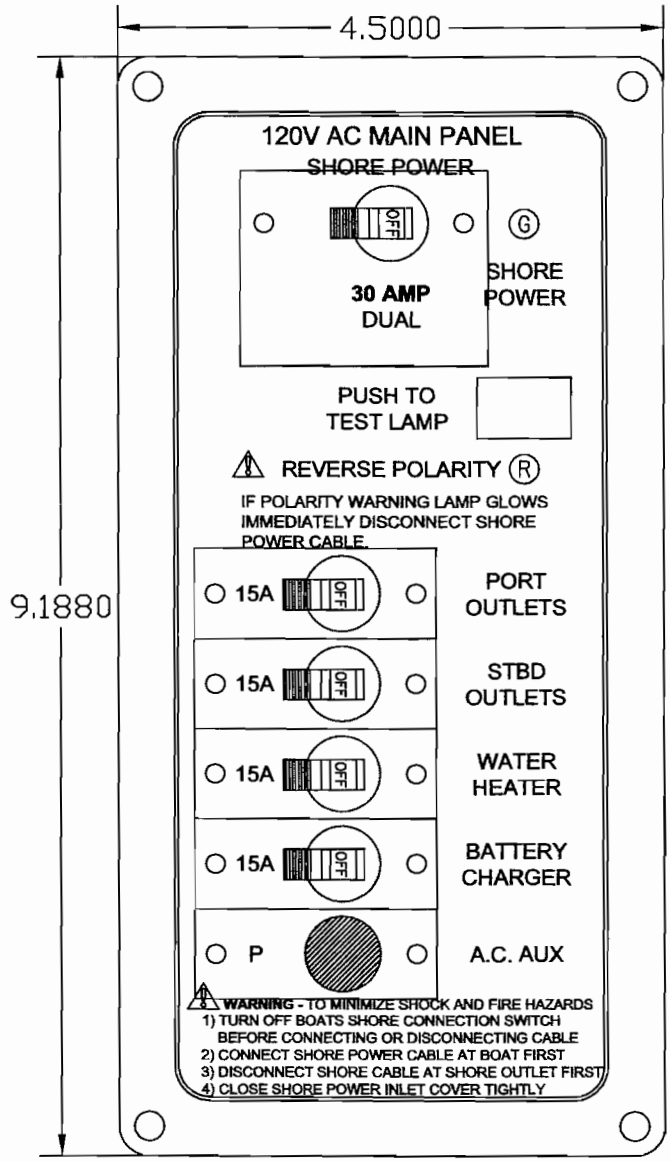

NOTE:
1.) .187" ABS WHITE OVER BLACK
2.) ALL MOUNTING HOLES WITH NYLON INSERTS
3.) USE NO BUSS BAR OR JUMPERS ON THIS PANEL

CUSTOMER: Catalina/Morgan			
DESCRIPTION: AC 120V option panel - shore panel			
USED ON: USED ON C-390 + 350		Seaward Products	
DRAWN BY: wrh	SCALE: NONE	DRAWING NUMBER: PB4382	
REVISION:	DATE: 8-31-2000		

9-6-2000

CATALINA/MORGAN 4383

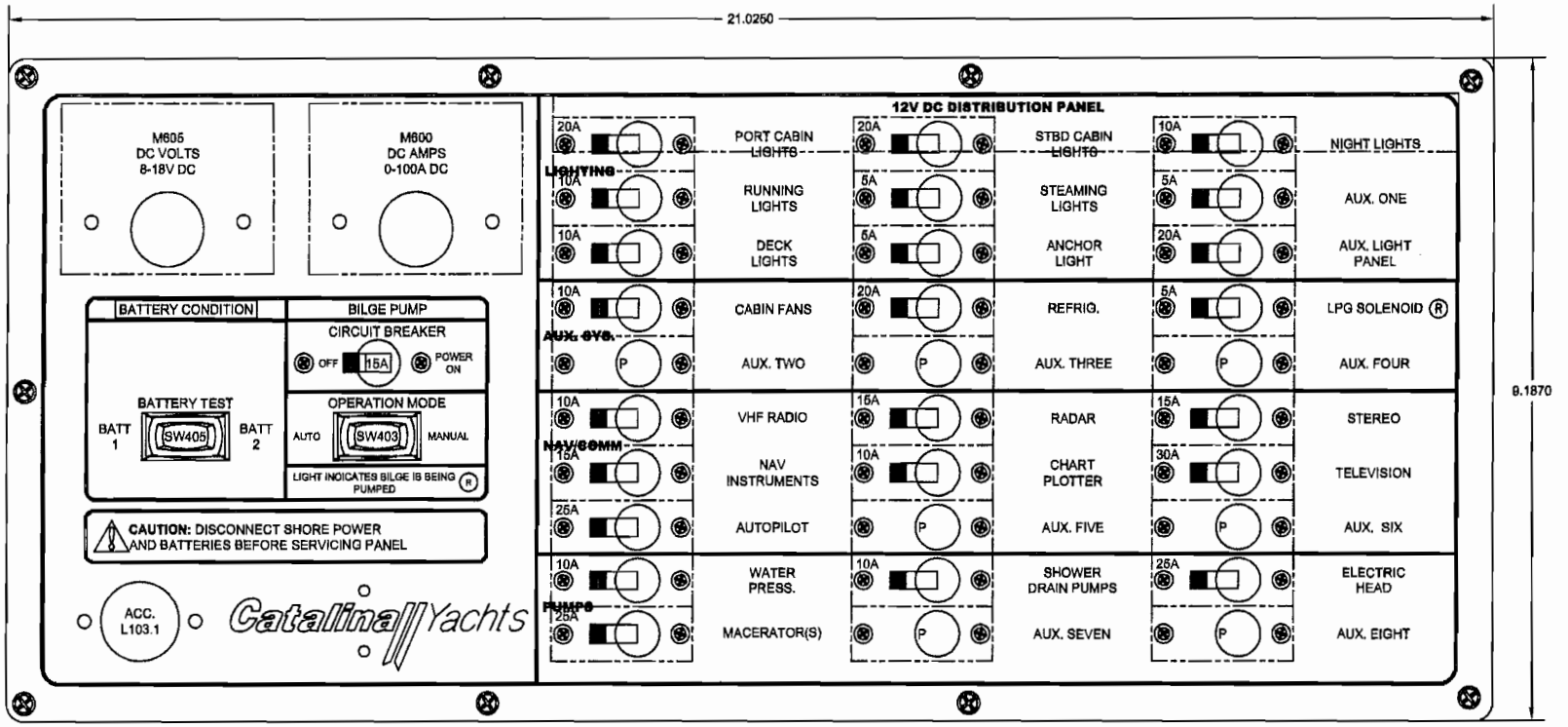

NOTES:
1.) .1875" ABS, WHITE OVER BLACK
2.) ALL MOUNTING HOLES WITH NYLON INSERTS

DESCRIPTION: DC PANEL FOR C390	DRAWN BY: WRH
	DATE: 9-6-2000
CUSTOMER: CATALINA/MORGAN	DATE REVISED: 9-6-2000
	DRAWING NUMBER: PB4383
USED ON: C390 350	Seaward Products

3721 Capitol Avenue, Whittier, CA 90
Phone: (562) 699-7997 Fax: (562)

PLUMBING:

THE HEAD: (SANITARY SCHEMATIC PAGE-49)

1. Read the instructions supplied by the toilet manufacturer for operating your marine toilet. These instructions are also printed on the toilet pump housing. Be sure everyone who will be using the head is familiar with these instructions.

2. Immediately before using the head, the inlet valve "A" must be opened. This provides flushing water to the toilet. The valve should be kept closed when the head is not is use. This will prevent water from flooding the boat if the valve in the toilet pump should fail.

3. Waste will be pumped directly into the holding tank when the bowl is emptied. A minimum amount of water for every flush should be used in order to take best advantage of the tanks capacity between pump-outs.

3. To clean the head, use hot water and soap. High strength cleaners may cause damage to the valves and seals in your pump system. If there is any problem with the head, it should be corrected immediately.

EMPTYING THE TANK THROUGH THE DECK DISCHARGE PLATE:

1. The holding tank should be emptied via the deck discharge plate only at approved shore-based pump-out stations.

2. Remove the cap from the deck discharge plate. The threads on the plate cap should be periodically coated with silicone spray or petroleum jelly to ensure a good seal.

3. The pump-out station suction hose should form a seal at the deck plate.

4. Be sure inlet valve "A" is closed when the tank is being emptied.

5. After the tank is empty, you may wish to open valve "A" and pump water through the toilet and into the tank to dilute residual sludge and rinse the tank and lines.

6. Close all valves after the tank is emptied and recap the deck plate.

EMPTYING THE TANK:

1. Open the through hull valve "B".
2. You may wish to rinse the tank, hose lines, and macerator pump by pumping clear water through the head, then repeating the procedure for emptying the tank.

MACERATOR PUMP AND TROUBLESHOOTING:

PROBLEM 1: The macerator pump motor starts then stops.

A. Check the breaker: It should be "IN" or "ON".

B. Check the valves: "B" valve must be open. (SANITARY SCHEMATIC –PAGE 49)

C. Check the vent line. If the boat has been sailed at extreme angles of heel, fluid may be clogging the vent line. Disconnect the vent at the tank and empty the hose into a disposable container.

D. Sludge may have formed in the bottom of the tank. This should be diluted as much as possible. The tank should be emptied regularly to prevent sludge build up.

PROBLEM 2: The head toilet pump has excessive back pressure and will not evacuate the bowl.

A. Refer to the toilet manufacturer's specifications and operation instructions.

INSTRUCTION FOR SANITIZING POTABLE WATER SYSTEM:

To assure complete sanitation of your potable water system it is recommended that the following procedures be used. This applies if it is a new system, one not used for a period of time, or one that may have become contaminated.

(1) Prepare a chlorine solution using one gallon water and ¼ cup Clorox 2 household bleach (5% hyperchlorite solution). With tank empty, pour chlorine solution into tank. Use one gallon solution for each 15 gallons tank capacity.

(2) Complete filling tank with fresh water. Open faucet and drain cock until all air has been released and entire system is filled.

(3) Allow to stand for three (3) hours.

(4) Drain and flush with potable water. (IMPORTANT)

(5) To remove excessive chlorine taste or odor which might remain, prepare a solution of one quart vinegar to five gallons water and allow this solution to agitate in tank for several days by vessel motion.

(6) Drain tank and again flush with potable water. (IMPORTANT)

The above recommendations conform to section 10.8 in the A119.2 code covering electrical, plumbing, and heating of a recreational vehicle. The solution is approved and recommended by competent health officials.

MANUAL BILGE PUMP:

The manual bilge pump is located in the cockpit. Insert the handle through the water tight fitting in the cockpit to operate the pump. The pump intake hose is in the keel stub under the main cabin sole. There is a screen on the bilge pump pick-up. This screen should be periodically checked and cleared of debris.

SEACOCKS:

All underwater through hull fittings are equipped with seacock ¼ turn valves. It is good practice to close all seacock valves when leaving the boat, especially for long periods of time.

To close seacock valves, turn handle perpendicular to flow. To open, turn handle ¼ turn to parallel.

It is good practice to operate the seacock valves at least once a month to keep the seals lubricated. Refer to the through hull and seacock maintenance guide supplied by the manufacturer enclosed in this manual.

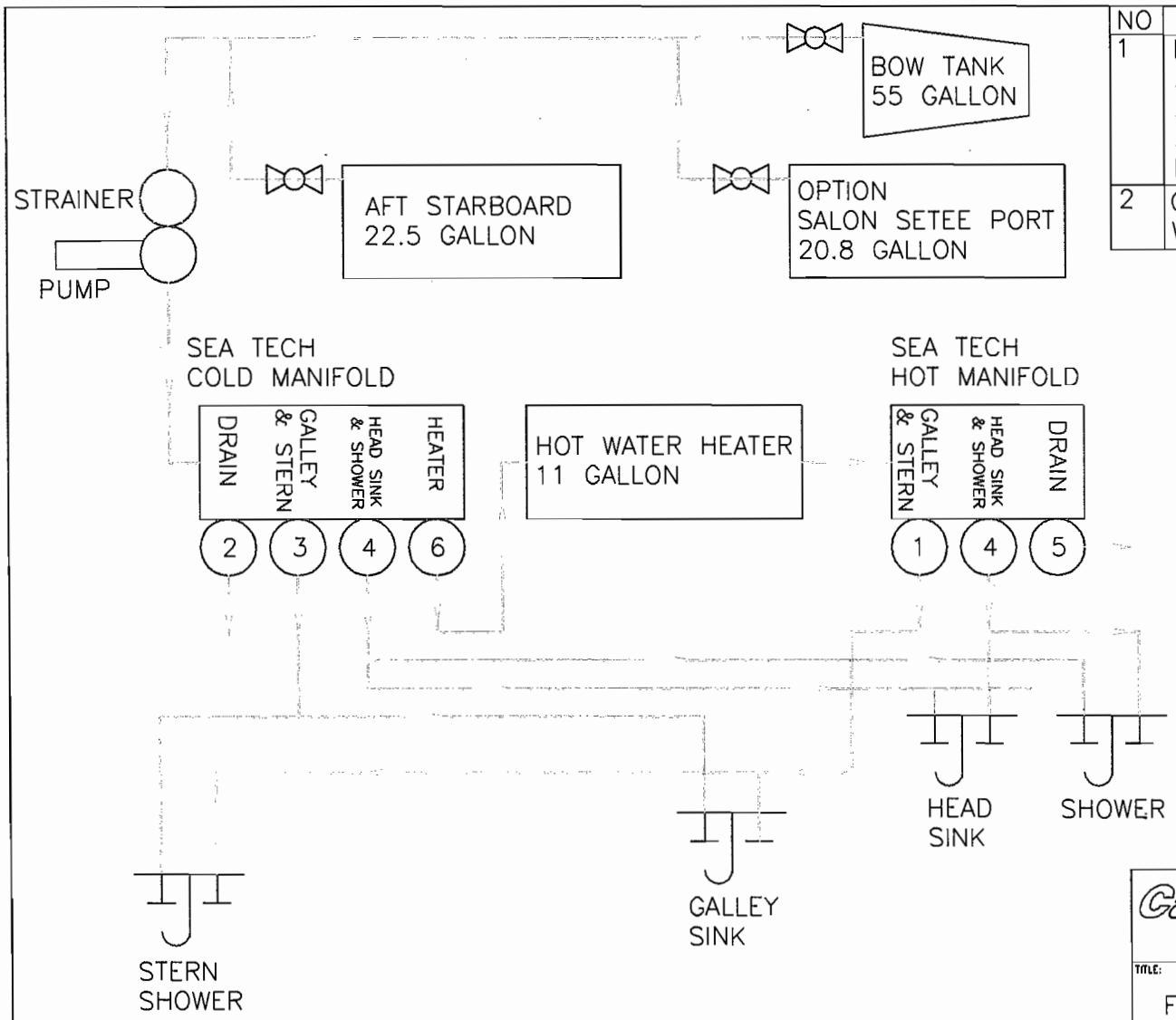

NO	REVISION	DATE
1	DELETED GALLEY HAND PUMP. ADDED DRAIN TO HOT WATER AND COLD WATER MANIFOLDS. ADDED OPTIONAL WATER TANK IN SALON SETEE.	02/05/02
2	COMBINED COLD AND HOT WATER VALVES IN MANUFOLDS.	03/15/02

PROPRIETARY INFORMATION
THE DESIGNS, INFORMATION, AND DATA CONTAINED HEREIN ARE PROPRIETARY AND ARE SUBMITTED IN CONFIDENCE, AND SHALL NOT BE DISCLOSED, USED, OR DUPLICATED, IN WHOLE OR IN PART, FOR ANY PURPOSES WHATSOEVER, WITHOUT THE PRIOR WRITTEN PERMISSION OF CATALINA YACHTS, 21200 VICTORY BLVD. WOODLAND HILLS, CALIFORNIA 91367. THIS LEGEND SHALL BE MARKED ON ANY REPRODUCTIONS HEREOF IN WHOLE OR IN PART. RECEIPT OF THIS DOCUMENT SHALL BE DEEMED TO BE AN ACCEPTANCE OF THE CONDITIONS SPECIFIED HEREIN.

UNLESS OTHERWISE SPECIFIED
DIMENSIONS ARE IN INCHES
GENERAL TOLERANCES
ANGLES : ±0.5°
X.X : ±0.1
X.XX : ±0.01
X.XXX : ±0.005
SURFACE FINISH: 63
DO NOT SCALE DRAWING

Catalina Yachts
7200 BRYAN DIARY RD.
LARGO, FL. 33777
(727) 544-6681

TITLE:
FRESH WATER SCHEMATIC

BOAT: CATALINA 350		DRAWING NO: 350-64050-2	
DESIGNED BY:	CHECKED BY:	SCALE: NONE	SIZE: B / SHEET: 1/1
DRAWN BY: G.T.B.	APPROVED BY:	DATE: 12/17/01	

NO	REVISION	DATE
1	REVISED TANK CAPACITY, WAS 38 GAL. FIRST BOAT #2	04/22/02

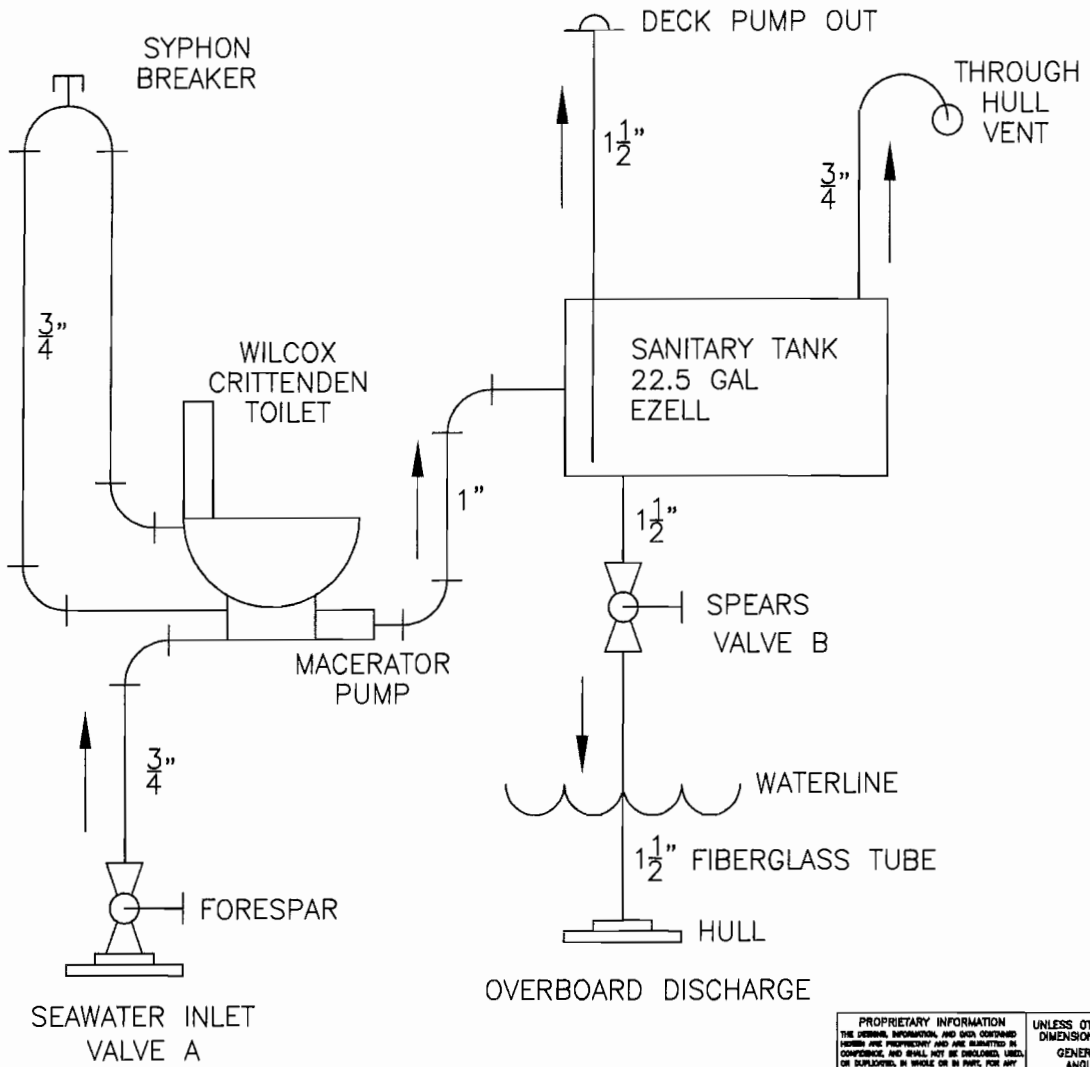

PROPRIETARY INFORMATION
THE DRAWING, INFORMATION, AND DATA CONTAINED HEREIN ARE PROPRIETARY AND ARE SUBMITTED IN CONFIDENCE, AND SHALL NOT BE DISCLOSED, USED, OR DUPLICATED, IN WHOLE OR IN PART, FOR ANY PURPOSES WHATSOEVER, WITHOUT THE PRIOR WRITTEN PERMISSION OF CATALINA YACHTS, 21200 VICTORY BLVD, WOODLAND HILLS, CALIFORNIA 91367. THIS LEGEND SHALL BE MARKED ON ANY REPRODUCTIONS HEREOF IN WHOLE OR IN PART. RECEIPT OF THIS DOCUMENT SHALL BE DEEMED TO BE AN ACCEPTANCE OF THE CONDITIONS SPECIFIED HEREIN.

UNLESS OTHERWISE SPECIFIED DIMENSIONS ARE IN INCHES
GENERAL TOLERANCES
ANGLES : ±0.5°
X.X : ±0.1
X.XX : ±0.01
X.XXX : ±0.005
SURFACE FINISH: 63
DO NOT SCALE DRAWING

Catalina Yachts
7200 BRYAN DIARY RD.
LARGO, FL. 33777
(727) 544-6681

TITLE: SANITARY SCHEMATIC

BOAT: CATALINA 350		DRAWING NO: 350-61050-1		
DESIGNED BY:	CHECKED BY:	SCALE: NONE	SIZE: B	SHEET: 1/1
DRAWN BY: C.D.	APPROVED BY:	DATE: 12/14/01		

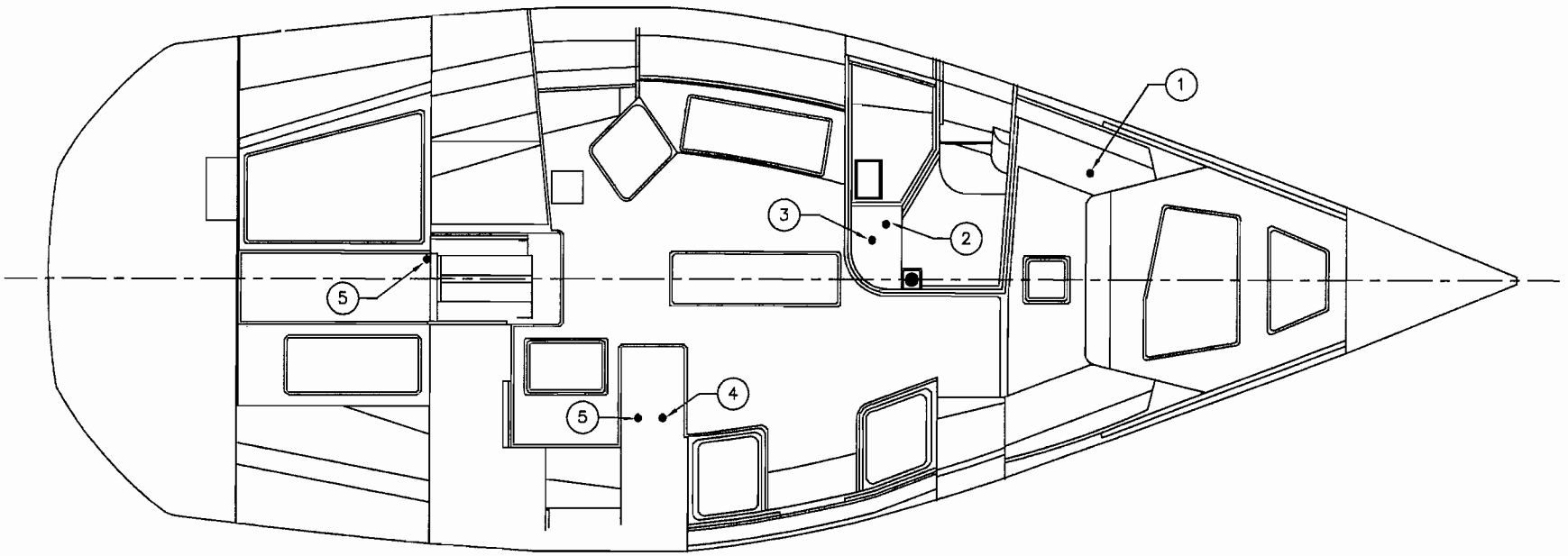

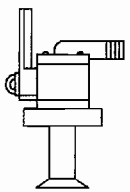

A
90°
3/4" 931153 #0050903 MUSHROOM

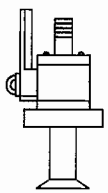

B
STRAIGHT
3/4" 931143 #0050901 MUSHROOM
1-1/2" 931146 #0050900 MUSHROOM

ITEM	DESCRIPTION	SIZE	EXAMPLE
1	HEAD INLET	3/4"	A
2	SINK DRAIN, HEAD	3/4"	B
3	SHOWER, OVERBOARD	3/4"	A
4	SINK DRAIN, GALLEY	1-1/2"	B
5	ICE BOX DRAIN	3/4"	A
6	ENGINE INTAKE	3/4"	A

PROPRIETARY INFORMATION
THE DESIGN, INFORMATION, AND DATA, CONTAINED HEREIN ARE PROPRIETARY AND ARE SUBMITTED IN CONFIDENCE, AND SHALL NOT BE DISCLOSED, USED, OR DUPLICATED, IN WHOLE OR IN PART, FOR ANY PURPOSES WHATSOEVER, WITHOUT THE PRIOR WRITTEN PERMISSION OF CATALINA YACHTS, INC. 21200 VARNEY BLVD, LARGO, FLORIDA 33765. THIS LIMITED SHALL BE MARKED ON ANY REPRODUCTION HEREOF IN WHOLE OR IN PART. RECEIPT OF THIS DRAWING SHALL BE DEEMED TO BE AN AGREEMENT BY THE RECIPIENT TO THE ABOVE.

UNLESS OTHERWISE SPECIFIED DIMENSIONS ARE IN INCHES
GENERAL TOLERANCES
ANGLES : ±0.5°
X.X : ±0.1
X.XX : ±0.01
X.XXX : ±0.005
SURFACE FINISH: 63
DO NOT SCALE DRAWING

Catalina Yachts
7200 BRYAN DAIRY RD.
LARGO, FL. 33777
(727) 544-6881

TITLE
THRU HULL LOCATIONS

MODEL: CATALINA 350		DRAWING NO: 350-22051-0	
DESIGNED BY:	CHECKED BY:	SCALE: 3/4"=1'0"	REV: D
DRAWN BY: C.D	APPROVED BY:	DATE: 01/07/02	SHEET: 1/1

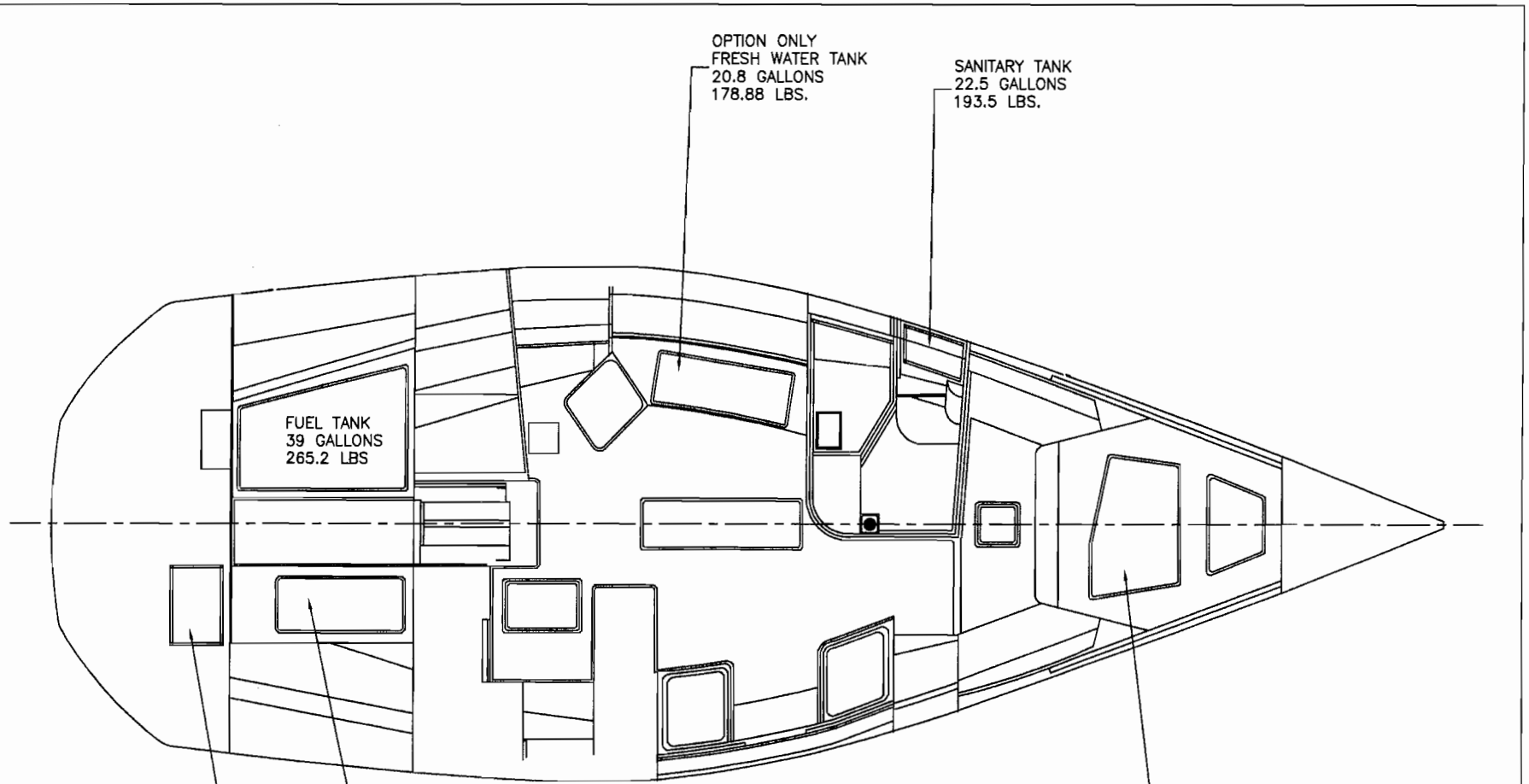

PROPRIETARY INFORMATION
THE CONCEPTS, INFORMATION, AND DATA CONTAINED HEREIN ARE PROPRIETARY AND ARE SUBMITTED IN CONFIDENCE, AND SHALL NOT BE DISCLOSED, USED, OR DUPLICATED, IN WHOLE OR IN PART, FOR ANY PURPOSE WHATSOEVER, WITHOUT THE PRIOR WRITTEN PERMISSION OF CATALINA YACHTS, 21200 VICTORY BLVD, WOODLAND HILLS, CALIFORNIA 91367. THIS LIMITED SHALL BE MARKED ON ANY REPRODUCTION THEREOF IN WHOLE OR IN PART. OWNERSHIP OF THIS DOCUMENT SHALL BE RETAINED TO BE AS PROPERTY OF THE CATALINA YACHTS.

UNLESS OTHERWISE SPECIFIED DIMENSIONS ARE IN INCHES
GENERAL TOLERANCES
ANGLES : ±0.5°
X.X : ±0.1
X.XX : ±0.01
X.XXX : ±0.005
SURFACE FINISH: 63
DO NOT SCALE DRAWING

Catalina Yachts
21200 BRYAN DAIRY RD.
LARGO, FL. 33777
(727) 544-6881

TITLE
TANK LOCATIONS

MODEL: CATALINA 350		DRAWING NO.: 350-67054-0	
DESIGNED BY:	CHECKED BY:	SCALE: NONE	SIZE: B / SHEET: 1/1
DRAWN BY: C.D	APPROVED BY:	DATE: 02/28/02	

AUXILLARY POWER:

GENERAL ENGINE INFORMATION:

WARNING: Do not open engine compartment doors when engine is running. Contact with hot or moving engine parts can cause serious injury.

For a complete description of your engine, please consult the guide supplied by the engine manufacturer. This can be found in your owner's packet.

Two points are worth special attention. Firstly, marine engines work under conditions tougher than those conditions of automotive engines. Your marine engine faces constant torque not encountered on the highway. For this reason, you must change your engine's crank oil as recommended in the engine manufacturer's guide. Secondly, before using your engine, the shaft coupling must be adjusted within a tolerance of .003 T.I.R. thousandths after launching. This is done during commissioning of the yacht. Be sure that your dealer has made this adjustment before using your engine.

Change the oil in accordance with manufacturer's recommendations. Keep spare filters and alternator belts on hand. Keep your fuel tank full whenever possible to prevent water condensation in your fuel tank.

To retard electrolysis, we recommend installing a zinc collar immediately on the propeller shaft when the boat is to be used in salt water.

SHAFT PACKING BOX (STUFFING BOX):

The packing gland is located aft of the engine. Properly adjusted shaft packing gland should drip slightly with the engine off. Too loose of an adjustment will allow too much water in the bilge and
engine operation will spray water from the shaft. Too tight an adjustment will rob the engine of power, and the lack of water lubrication in the packing gland can generate enough heat to damage the gland and/or score the propeller shaft.

ADJUSTMENT:

1. Holding the packing nut with one wrench, use a second wrench to loosen the lock nut. Turn the lock nut far enough to keep it from interfering with the next adjustment (2 or 3 turns).

2. Tighten the packing nut to obtain 1 to 2 drops per minute. Hand tightening of the packing nut is often sufficient to obtain this adjustment. If this is not the case, an additional ¼ to ½ turn with the wrench should produce the desired result.

3. Hold the packing nut in place with one wrench, and use the second wrench to bring the locking nut securely against the packing nut. Make certain that the locking nut is tight. Failure to do this could allow the allow the packing nut to back off when the engine is operating.

4. Operate the engine at slow speeds in forward and reverse and use a light to check for excessive water at the packing nut. Shut off the engine and recheck packing for proper drip.

SHAFT ALIGNMENT:

For proper operation of the engine, the propeller shaft and engine must be aligned.

Alignment is gauged at the engine and shaft coupling. Alignment procedures must be done with the boat in the water after the mast is stepped, and the rigged is tuned.

1. Remove coupling flange bolts and check propeller shaft for clearance.

2. Slide shaft away from engine and check coupling mating surfaces. These must be clean.

3. Slide shaft forward to connect coupling surfaces. Pilot on transmission flange must align with recess in shaft coupling flange. This is an indication of correct axial alignment.

4. With coupling flanges in contact, measure gap around edge of coupling with .003 feeler gauge. Maximum allowable gap at any point is three thousandths of an inch. Take this measurement several times...rotating shaft ¼ turn each time. Any gap in excess of .003 must be corrected by changing engine position, especially fore/aft tilt. For example, excessive gap at the bottom of the coupling (see drawing) indicates engine is tilted too far aft (front too high). Using a 15/16 end wrench, loosen lock nuts on forward motor mounts(s). Lower front of engine by clockwise rotation of motor mount nuts. Remeasure gap at coupling. A gap at the top of the coupling would require the exact reverse procedure.

5. Pull shaft backwards as in step 2. Again slide shaft forward, rechecking axial alignment as in step 3.

6. Repeat steps 4 and 5 until alignment within tolerance is achieved.

7. Tighten motor mount lock nuts and install coupling bolts.

NOTE: Alignment should be checked yearly, or whenever any excess vibration is noticed. The alignment can also be affected by changes in rigging tension.

FUELING:

The fuel system consists of a fuel tank, fuel suction and return lines, a primary fuel filter/water separator and a secondary fuel filter on the engine and an electric fuel pump (on engine) controlled by the engine key switch, a deck fill plate, and an overboard vent through the transom.

Reliability depends on the clean fuel being supplied to the engine since the close tolerances required by the engine's fuel delivery system make it intolerant of dirt or water contamination. The engine is supplied with primary and secondary filters that prevent contaminants from reaching the engine where they could cause damage. However, a clogged filter, although providing this protection, can also stop an engine. Keeping the filters free of dirt and water is critical.

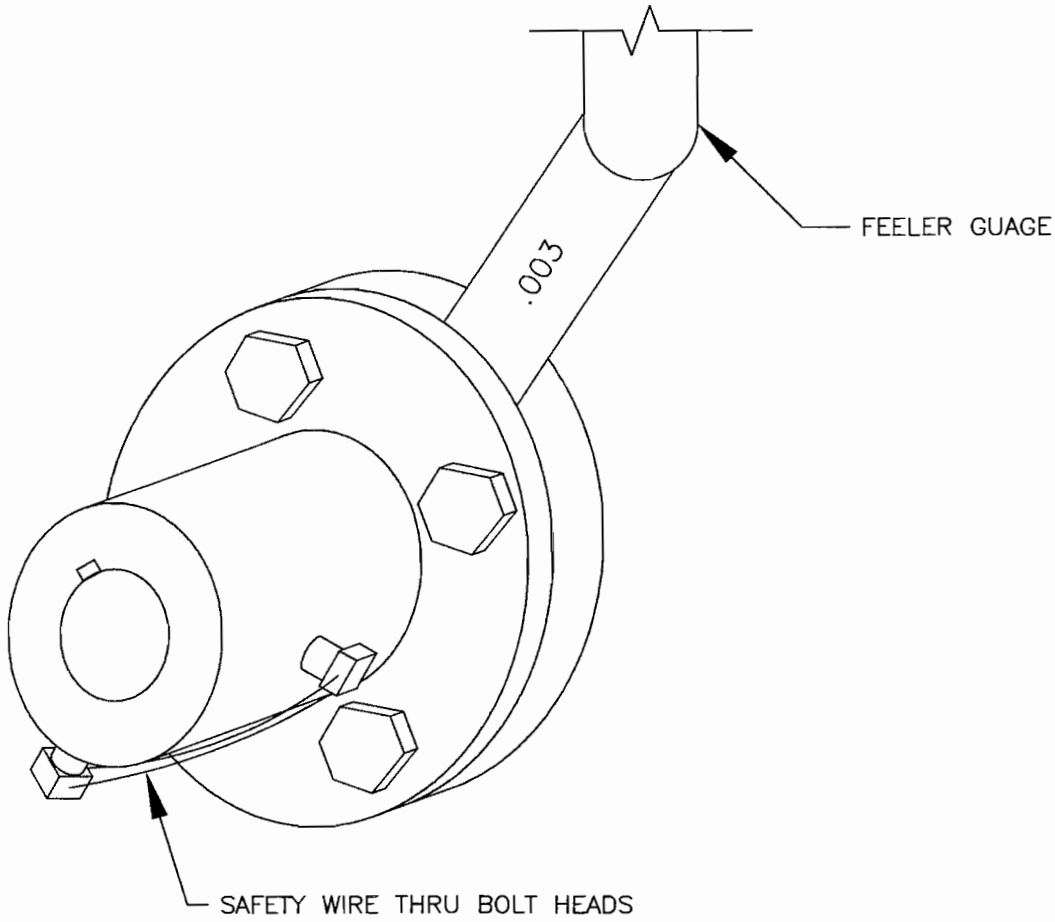

MEASURE GAP BETWEEN MATING FACES OF COUPLING FLANGES.
MAXIMUM ALLOWABLE GAP AT ANY POINT IS .003 WHEN ANY
POINT OF COUPLING FACES ARE IN CONTACT.
TAKE THIS MEASUREMENT SEVERAL TIMES, ROTATING SHAFT 1/4 TURN EACH TIME.
THIS MEASUREMENT MUST BE MADE WITH COUPLING BOLTS REMOVED.

PROPRIETARY INFORMATION

THE DESIGNS, INFORMATION, AND DATA CONTAINED HEREIN ARE PROPRIETARY AND ARE SUBMITTED IN CONFIDENCE, AND SHALL NOT BE DISCLOSED, USED, OR DUPLICATED, IN WHOLE OR IN PART, FOR ANY PURPOSES WHATSOEVER, WITHOUT THE PRIOR WRITTEN PERMISSION OF CATALINA YACHTS, 21200 VICTORY BLVD. WOODLAND HILLS, CALIFORNIA 91367. THIS LEGEND SHALL BE MARKED ON ANY REPRODUCTIONS HEREOF IN WHOLE OR IN PART. RECEIPT OF THIS DOCUMENT SHALL BE DEEMED TO BE AN ACCEPTANCE OF THE CONDITIONS SPECIFIED HEREIN.

Catalina Yachts

7200 BRYAN DIARY RD.
LARGO, FL. 33777
(727) 544-6681

UNLESS OTHERWISE SPECIFIED
DIMENSIONS ARE IN INCHES

GENERAL TOLERANCES
ANGLES : ±0.5°
X.X : ±0.1
X.XX : ±0.01
X.XXX : ±0.005
SURFACE FINISH: 63
DO NOT SCALE DRAWING

TITLE:

SHAFT ALIGNMENT

BOAT: CATALINA 350			DRAWING NO: 350-58050-0		
DESIGNED BY:	CHECKED BY:		SCALE: NONE	SIZE: A	SHEET: 1/1
DRAWN BY: C.D.	APPROVED BY:		DATE: 03/19/02		

BEFORE FUELING:

1. Extinguishing all smoking materials and check around the fueling area for other sources of spark or flame. Remove if found.

2. Shut off the engine, and any electrical accessories or devices.

3. De-energize all electrical equipment by turning the selector switch to the off position.

4. Close all hatches and ports.

5. Ensure that a fire extinguisher is readily available.

6. Ensure that the proper (diesel, not gasoline) hose is about to be used.

WARNING: Do not fuel during an electrical storm. Besides the obvious hazard of lightning, the possibility of static discharge is greatly increased at this time.

FUELING PROCEDURE:

1. Remove fill pipe cover using a proper tool.

2. Place nozzle of fuel hose in the fill pipe. Keep the nozzle in contact with the deck plate rim during fueling to avoid the possibility of a static spark.

3. Fill slowly. Do not overfill. If it is not possible to see the meter on the fuel pump, the attendant or a crew member should call out the gallonage from the fuel dock. Filling the tank to only 95% of capacity will avoid overflow problems on a hot day.

4. Replace cover, clean up any spilled fuel. If any rags, etc., were used for this purpose, dispose of them ashore.

5. Check below decks for presence of fumes or fuel leakage. Check bilge, engine space, and main cabin. If fumes or evidence of leakage are found, determine the cause, correct it, and clean up any spillage before proceeding.

6. The engine should be started only when it is certain that no potentially hazardous conditions exist.

FUEL SANITATION:

BACTERIAL CONTAMINATION:

Bacterial contamination of the diesel fuel can cause problems. The bacterium need both water and fuel to exist, and thrive at the fuel/water interface in a fuel tank. As they multiply, they form more water and a filter choking brown slime. Their presence will not be known until rough weather churns up the fuel tank causing clogged filters at the worst possible time.

Keeping water out of the fuel will prevent the problem entirely. However, a certain amount of water, due to normal condensation in the tank, is to be expected.

FUEL ADDITIVES:

Fuel additives or fungicides provide another means of combating contamination. Additives break the water down to a molecular level, dispersing it throughout the fuel and allowing it to pass harmlessly through the fuel system. Several brands of this product are available at marine stores.

EXHAUST SYSTEM MAINTENANCE:

In-board engine installations on sailboats differ from engine installations on powerboats. The primary difference is that the engine is usually installed below the waterline of the vessel.

The benefits of these locations are that the weight of the engine is where it will not adversely effect trim, and that the shaft is at an efficient angle for powering and minimum drag when sailing.

Engine installations below the waterline require special attention to the design of the exhaust system. The discharged cooling water must be exhausted above the waterline to avoid excessive back pressure on the engine and prevent sea water from traveling up the exhaust line and entering the engine.

To exhaust the engine above the waterline, the discharged cooling water and exhaust gas must be "lifted" to a level above the through hull fitting on the transom.

The exhaust cooling water and exhaust gas are lifted above the waterline by an "aqua-lift" type muffler. The aqua-muffler performs three jobs:

1. It mixes engine gas and water to cool the gas and lower exhaust line temperature.

2. It baffles and deadens engine exhaust noise.

3. It creates pressure required to lift and expel cooling water.

As shown in the illustration, the inlet tube into the aqua-lift is short and the outlet tube is long near the bottom of the tank.

As water accumulates in the bottom of the tank, exhaust gas pressure builds in the top of the tank. This forces the cooling water up the exit tube and through the exhaust line overboard.

The system required exhaust pressure in the tank to function. When the starter motor is turning over, before the engines fires, water is being pumped through the cooling system by the belt driven cooling water pump. It is very important not to operate the starter motor for more than 30 seconds if the engine does not fire. Should it be necessary to operate the starter motor more than 30 seconds, water must be drained from the aqua-lift by opening the drain at the base of the aqua-lift.

The drain valve may be opened until the engine fires, if desired. All Catalina are equipped with anti-siphon valves as an additional precaution to prevent cooling water from entering the engine.

The function of the anti-siphon valve is to prevent cooling water from being siphoned through the through hull valve, through the engine cooling system and into the aqua-lift muffler when the engine is not operating.

If the muffler were to fill completely with water, water would travel up to inlet tube and enter the engine block.

The Catalina exhaust system is basically simple and will provide trouble free service if you perform regular maintenance and inspection. The important points to remember are:

1. Close the engine cooling water through hull valve when you are not operating the engine.

2. Do not operate the starter motor for more than 30 seconds without draining the aqua-lift muffler.

3. Periodically disassemble the anti-siphon valve. Be sure the valve is not fouled with salt deposits and that it opens freely under the cap.

4. Check the operation by removing the valve:

    A. Put a finger over one large hole and blow through the other. Air should not escape through the cap.

    B. If you suck through one large hole with a finger over the other, air enter the valve through the cap.

STEERING:

EMERGENCY TILLER:

It is recommended that the skipper and crew become familiar with the emergency tiller and its use.

The emergency tiller should be stored in a convenient location, known to everyone operating the boat.

A dry run of the system will minimize confusion in an emergency:

1. Locate the emergency tiller.
2. Remove the wheel. Keeping a wrench handy for this purpose is a good idea.
3. Insert the emergency steering tiller in the rudder post cap.

NOTE: The emergency steering tiller moves the whole steering, including cables and quadrant. These elements must be free to move in order to steer the boat.

CATALINA SAILBOATS WITH MARELON RUDDER BEARINGS AND PACKING GLAND:

This non-metallic bearing system is designed to operate with no lubrication other than water.

- Specifically, no lubricants such as: petroleum grease, WD-40, aerosol, or paste, silicon gel, Teflon gel or Lanolin paste. ONLY WATER.

In the event that leakage occurs around the rudder shaft at the packing gland, and it should becomes necessary to take up on the packing, observe the following procedures:

1. Over-tightening the take-up will result in stiffening the steering system.
2. The take-up must be equal at the bolt locations around the shaft. If not, stiffening will occur.
3. The proper amount of take-up should permit an occasional drop or two of water to weep out when the shaft is being turned.

ACCOMMODATION:

GALLEY STOVE:

There is a gimbaled stove with oven in the galley area It comes with an operation and maintenance booklet provided by the stove manufacturer. The standard LPG gas bottle is located in a vapor-tight container located in the stern locker. The container is fitted with a drain and vent fitting on the transom. Keep these clear at all times.

A few additional points of operation for the standard LPG stove are below:

It is recommended that every time the LPG tank valve is opened for use, the operator close the valve and watch that the gauge needle remains constant. The gauge should read approximately 110 PSI. If you can detect a failing in pressure over a 15-minute period of time, there is a leak. LEAKS CAN BE DANGEROUS.

a. If a leak occurs, check all appliance burners to see if they are in the "OFF" position.
b. Make sure the oven control is in the "OFF" position.
c. Check all fittings with a soap and water solution.
   NEVER USE A FLAME TO CHECK FOR LEAKS.

If you cannot find the leak, contact the stove manufacturer promptly.

To light the oven: Light the right front burner to bleed air from the system for at least one (1) minute. Turn the temperature control knob from the "OFF" position to the "PILOT ON" position. After this has been done, light the pilot in the oven (constant pilot).

After the oven is lit, turn the oven temperature control knob to the desired temperature.

Notes on the Solenoid: The solenoid must be turned on to test gauge for leaks. Both the solenoid and the tank valve must be turned on to receive fuel. The solenoid is an electrical device for turning on or off the fuel from inside the cabin at the electrical panel.

Points to remember: All stoves have been safety tested, however, it is wise to remember to never leave the boat when oven or burners are on. Turn off the tank when you leave the boat for more than one or two days. Always blow out the pilot light when you will be away from the boat for more than two days, and check for leaks when you open the tank.

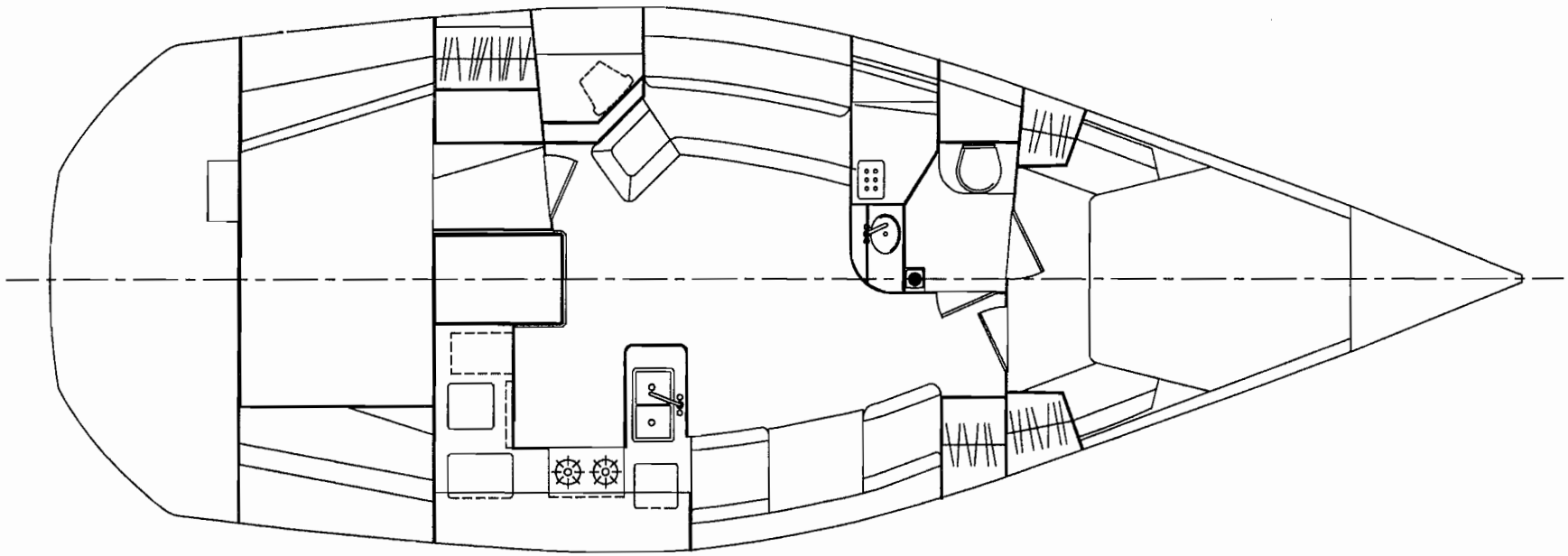

PROPRIETARY INFORMATION
THE DESIGNS, INFORMATION, AND DATA CONTAINED HEREIN ARE PROPRIETARY AND ARE SUBMITTED IN CONFIDENCE, AND SHALL NOT BE REPRODUCED, USED, OR DISCLOSED, IN WHOLE OR IN PART, FOR ANY PURPOSE WHATSOEVER, WITHOUT THE PRIOR WRITTEN PERMISSION OF CATALINA YACHTS, 21200 VICTORY BLVD, WOODLAND HILLS, CALIFORNIA 91367, AND LICENSE SHALL BE GRANTED BY ANY REPRESENTATIVE HEREOF IN WHOLE OR IN PART. OWNERSHIP OF THIS DOCUMENT SHALL BE RETURNED TO US AT OUR REQUEST OR IF THE CONDITIONS SPECIFIED ABOVE.

UNLESS OTHERWISE SPECIFIED DIMENSIONS ARE IN INCHES
GENERAL TOLERANCES
ANGLES : ±0.5°
X.X : ±0.1
X.XX : ±0.01
X.XXX : ±0.005
SURFACE FINISH: 63
DO NOT SCALE DRAWING

Catalina Yachts
7200 BRYAN DAIRY RD.
LARGO, FL. 33777
(727) 544-6881

TITLE: INTERIOR PLAN

BOAT: CATALINA 350		DRAWING NO: 350-40050-0	
DESIGNED BY:	CHECKED BY:	SCALE: 3/4"=1'0"	SIZE: D	SHEET: 1/1
DRAWN BY: C.D	APPROVED BY:	DATE: 01/11/02		

DECOMMISSIONING

WINTERIZING YOUR ENGINE:

LAYING UP:

In cold climates where yachts are decommissioned during the winter, your Catalina may be safely stored in the water, provided adequate measures are taken to prevent ice damage to the hull. Check with your yard to determine the feasibility of storing in the water.

When the boat is to be stored on land, the mast may be left stepped on the deck. However, it is recommended that the mast be removed at the time of hauling for a thorough inspection and preparation for next season.

This allows plenty of time over the winter months to order and replace the shrouds or rigging parts needed, avoiding any delays in the spring commissioning.

AFTER HAULING:

1. Wash bottom, removing growth (where permitted by environmental regulation).

2. Wash topsides, deck, and all other exterior fiberglass surfaces. Wax all except the nonskid surfaces.

3. Remove all sails. Follow sailmaker's instructions or instructions Section 3.8, in regard to cleaning. Schedule any repairs required and store in a dry place.

4. Remove all sheets and lines, clean, store in a dry place.

5. If the mast had been removed from the yacht, remove all stays and shrouds from the mast. Wash the entire stay or shroud assembly, using fresh water and a stiff brush. Dry thoroughly, and coil into large non-kinking coils. Store the coils in a dry place. Wash and wax all spars. Coil halyards into non-kinking coils, and put in a dark colored plastic bag to protect them from sunlight if storing outdoors. Lash them to the mast. Store the mast either inside or outside with adequate support along its length.

6. If mast is to be left in place, remove the boom, clean and store as described before. Clean shroud/stay end fittings, toggles, etc. using fresh water and a stiff brush. Apply a light coat of silicone grease, paying particular attention to the end fittings where they connect to the stays and shrouds.

7. Clean and lubricate all deck hardware that contains moveable parts. Follow manufacturer's instructions on winches.

8. Remove all gear such as books, documents, bedding, PFD's, anything moveable that is subject to rust, corrosion or mildew.

9. Remove all food supplies from lockers or ice chest. Wash out ice chest interior with a weak solution of Clorox. Leave ice chest lid open.

10. Stored batteries should be fully charged, and both positive and negative terminals should be disconnected. The batteries may be either left aboard or stored in a cool, dry place. Sub zero temperatures will not harm a fully charged battery.

11. Close all manual shutoffs for the stove fuel system.

12. Winterize the head system in accordance with the manufacturer's instructions.

    A. Empty the holding tank, flush it out with fresh water several time. Add a holding tank chemical.
    B. Pump all the water out of the head.
    C. Shut off the head intake through hull.
    D. Remove the head intake line from the through hull. Put it in a container of antifreeze and pump it through the head. (Do not use ordinary anti-freeze), drain the head completely.
    E. Reconnect the intake line to the through hull.
    F. Shut the discharge through hull (if applicable).

    IMPORTANT: Always follow manufacturer's instructions wherever possible for winterizing the head system.

13. Hot and cold water system:

    A. Empty the water tanks as much as possible. (There will always be a small amount of water left.) Open drain tees, two required, both located under galley sink. One in hot line to faucet other discharge of fresh water pump.

    B. Add a potable water ant-freeze, sold in marine and RV stores (Do not use ordinary anti-freeze, it is toxic), to your water tank and a small amount of water. Pump this water/anti-freeze mixture through the water lines to all faucets. Do not forget to pump some from both tanks, if the boat has two. Also, drain the pumps. Do not allow anti-freeze to remain in the pump as this will damage the pump

    C. Close the sink drain through hulls, or plug the sink, if the through hull is above the waterline.

    IMPORTANT: Always follow the manufacturer's instructions wherever possible for wintering the hot and cold water system.

14. Remove all electronic gear that may require servicing during the winter.

15. Remove fire extinguishers for weighing, checking, and any necessary recharging. If an automatic fire extinguisher system is installed, return the cylinders to the yacht and reinstall as soon as possible.

16. If cushions are left aboard, bring cockpit cushions below and place all cushions on edge to encourage ventilation.

17. Leave all interior lockers open to encourage ventilation.

18. Ensure that cockpit and deck scuppers are open and free.

19. If the boat is to be covered, ensure that the cover is installed in such a way as to provide adequate ventilation, and that the cover is not permitted to chafe against the hull or deck.

20. If the boat is not be covered, ensure that mechanisms, such as winches and steering pedestals are provided with adequate covers.

21. If the mast is to remain stepped, snug all shrouds and halyards to minimize noise and wear.

GENERAL RULES:

We recommend the following procedures be followed when storing the yacht for prolonged winter months. Begin by consulting your authorized dealer about storing the boat in or out of water in freezing climates. If at all possible, the manufacturer recommends keeping the yacht in dry storage for severe winters.

All through hull fittings should be drained and closed off. Water in the sanitation system and other tanks should be pumped out. Fill the lines and fittings with anti-freeze to prevent water from running in, freezing or expanding, and cracking the lines and fittings.

For diesel engines, consult the manufacturer's manual for special instructions.

> Unless the manufacturer's manual states otherwise, drain the block, disconnect the water hose from the through hull fittings, attach an additional length of hose and place the end of this hose in a bucket of anti-freeze. Run the engine until straight anti-freeze comes out of the exhaust line. Stop the engine at this point, plug or cap the exhaust line, and remove the additional hose and bucket.

OWNER/USER RESPONSIBILITY

GENERAL SAFETY TIPS:

1. Do not venture out when the weather conditions are unfavorable or are predicted to become so. Listen to weather forecasts, check with your Harbor Patrol office, and look out for small craft warnings.

2. Be especially careful in areas where there may be commercial shipping traffic. Keep well away from shipping channels. Keep a sharp lookout when crossing the shipping channels.

3. Learn to follow the rules of the road. All other sailors will expect that you know them and abide by them. The U.S. Coast Guard (BBE-2), 400 S. Eleventh Street, S.W. ,Washington, D.C. 20590, will supply free literature on this. You local branch or Harbor Patrol office may have it available.

4. If your boat has a genoa sail that obscures the helmsman's vision, have a dependable person in the crew keep a sharp look-out under the genoa sail for traffic.

5. When sailing at night, provide safety harnesses for yourself and your crew, and secure these lines to the boat. Use approved harnesses.

6. Purchase all Coast Guard required safety equipment and learn how to use it.

7. Enroll in a C.G. class or other certified boating and sailing class. You will learn a lot and enjoy sailing even more.

8. Do not take more than a safe number of persons aboard your boat when sailing.

9. Marine insurance is worth every penny you pay for it. Take out insurance from the start. See your dealer for a recommended marine agent if you do not have one.

10. Keep all seat hatches and main hatch closed during rough weather or gusty winds which could unexpectedly strike the boat and cause a knock down.

11. CAUTION! The aluminum mast, and the metal parts conduct electricity. Coming in contact with, or approaching an electrical power line can be fatal. Stay away from overhead power lines and wires of any kind, when launching, underway, or when stationary.

REQUIRED SAFETY EQUIPMENT:

FIRE EXTINGUISHER:

It is wise to locate a minimum of two, approved for marine use, fire extinguishers, one for forward of the galley and one behind the galley, preferably below the cockpit hatch. Should an alcohol stove or engine fire start, you can always reach a fire extinguisher.

For example, you do not want to locate both of your extinguishers in the bow area because if you are located in the cockpit, you would have to get by the danger area to reach them if the fire is either in the galley or engine area.

Dry chemicals extinguishers should be inverted occasionally to prevent the contents from packing. Extinguishers should be recharged yearly or after each use, according to manufacturer's recommendations.

LIFE VESTS:

Keep a Coast Guard approved life vest aboard for each crew member. Wear them during rough weather and night sailing. Children should wear vests at all times no matter how they object.

HORN:

Your yacht should be equipped with a horn capable of producing a blast that can be heard for a distance of one mile.

FLARES:

The law requires that your yacht be equipped with a minimum of 3 day/night flares.

ADDITIONAL SAFETY EQUIPMENT AND SAFETY PACKAGE:

Refer to the Catalina Yacht available safety package, for a complete list on page 67

MEDICAL KIT:

A basic medical kit is a wise investment for any boat owner. Suggested items include: Motion sickness pills, aspirin, bandages, etc. We recommend that you personalize your medical supplied for you and your crew's specific needs.

TOOL KIT:

A varied arrangement of tools is again, a wise investment, to have on your boat. Tailor your tool box for the conditions that you sail. For local sailing, with professional help just a phone call away, you only need a small array of tools. However, for long range cruising, a more extensive supply of tools will be needed.

LIGHTNING PRECAUTIONS:

Your yacht was not provided with a lightning protection system during construction. The reasons are as follows:

1. There is no a procedure for lightning protection which is proven reliable under all conditions. Yachts with elaborate lightning protection systems have sustained serious damage from a direct lightning strike.
2. If the builder were to assert that the yacht was lightning protected, it could instill a false sense of confidence in the owner or operator, leading to less-than-prudent actions when lightning threatens.
3. Lightning systems are "out of sight, out of mind", except when lightening threatens. Generally, they are not checked and maintained on a regular bases. A defect in the system (i.e., a break in a ground line) could, in some cases, increase the risk of personal harm, as well as damage to the yacht, as compared to a yacht with no protection. The reason for this is that many lightning protection systems distribute the high voltage throughout the yacht before allowing it to exit through the ground.
4. It is the impossible for Catalina Yachts to control changes which you, the owner, may make to the yacht, which could affect lightning protection systems.

You, the owner, must decide whether or not you wish to equip your yacht with lightning protection. And, if so, the method of doing it. For your guidance, a copy of ABYC recommendations is attached. The following suggestions and comments are also offered:

1. Keep the system as simple as possible. This will facilitate both installation and inspection/ maintenance. Perhaps a single over-size ground (battery cable) from the mast to the engine, coupled with external shroud grounds (see 2 below), will maximize reliability.

2. ABYC recommends straight-line wire runs, which is virtually impossible within the yacht. For grounding the shrouds: A battery cable, which clips to each shroud and extends outside the yacht to the water, can minimize the number of bends required. This method has the added advantages of keeping the power surge outside the boat and allowing easy, routine inspection. The obvious disadvantage is that the clip on cables are not a permanent installation and may not be in place when an unexpected lightning strike occurs.

3. Use only top quality materials to go oversize wherever possible.

4. Keep all permanent attachment points and connections where they are readily available for inspection, yet protected from damage or inadvertent disconnection.

Factory installed metal tanks, 100 volt systems and major components are grounded to the engine. The engine is grounded via the shaft and propeller to the water. The purpose of internal grounding is for static charge control and accidental shorts in the internal systems - - not to provide lightning protection. However, you can incorporate the ground lines present in a lightning protection system you may wish to add.

By far, the most important consideration regarding lightning is observing common sense safety precautions when lightning threatens. The key considerations are listed in the American Boat and Yacht Council (ABYC) publication, which is printed herein.

E-4 LIGHTNING PROTECTION

Based on ABYC's assessment of the existing technology, and the problems associated with achieving the goals of this standard, ABYC recommends compliance with this standard for all systems and associated equipment manufactured and/or installed after July 31, 1998.

4. *PURPOSE*

These standards and recommended practices are guides for the design, construction, and installation of lightning protection systems on boats.

NOTE: The probability of a lightning strike varies with geographic location and the time of the year, but, when the conditions that create an electrical charge between clouds and the earth exist, there is nothing that can be done to prevent the lightning discharge. A boat can be struck in open water or while tied to the dock.

4.2 *SCOPE*

These standards and recommended practices apply to powerboats and sailboats if a lightning protection system is installed.

NOTES: 1. Complete protection from equipment damage or personal injury is not implied.

2. A lightning protection system offers no protection when the boat is out of water, and is not intended to afford protection if any part of the boat comes in contact with power lines while afloat or ashore.

3. Protection of persons and small craft from lightning is dependent on a combination of design and maintenance of equipment, and on personnel behavior. The basic guides contained in this standard shall be considered and used in designing and installing a lightning protection system. However, in view of the wide variation in structural design of boats, and the unpredictable nature of lightning, specific recommendations cannot be made to cover all cases.

4.3 *REFERENCED ORGANIZATIONS*

ABYC - American Boat and Yacht Council, 3069 Solomon's Island Road, Edgewater, MD 21037-1416. 410-956-1050

NFPA - National Fire Protection Association, 1 Batterymarch Park, PO Box 9101, Quincy, MA 02269-9101. 617-770-3000.

4.4 *DEFINITIONS*

Air terminal - A device at the upper most point of the lightning protection system to dissipate the charge or start the lightning ground process.

Equalization bus - A metallic strap, which may be installed on the interior of a boat, substantially parallel to the exterior lightning ground plate, and connected to the lightning ground plate at both ends. Secondary lightning conductors can be connected to the equilization bus. The equalization bus provides a low resistance path to the lightning ground plate.

Lightning bonding conductor - A conductor intended to be used for potential equalization between metal bodies, and the lightning protection system to eliminate the potential for side flashes.

Lightning ground plate (or strip) - A metallic plate, or strip on the hull exterior below the waterline, that serves to efficiently transfer the lightning current from the system of down conductors to the water.

Lightning protective gap (air gap) - A form of lightning arrester wherein a small air space is provided between two metallic plates, with one connected directly to the vessel grounding plate or strip, and the other to an operating electrical system, such as a radio transmitter or receiver.

Lightning protective mast - A conductive structure, or if non-conductive, equipped with a conductive means, and an air terminal.

Parallel path - A path to ground that may be followed by a lightning strike. This path is separate from the path formed by the primary lightning conductor.

Primary lightning conductor - The main vertical electrical path in a lightning protection system formed by a metallic mast, metallic structure, electrical conductors, or other conducting means, to a ground plate, ground strip, or a metallic hull.

Secondary lightning conductor - A conductor used to connect potential parallel paths, such as the rigging on a sailboat, to the primary lightning conductor, or to the lightning ground plate, strip or equalization bus.

Side flash - An arc-over discharge that occurs from the lightning system to any metallic object.

Zone of protection - An essentially cone shaped space below a grounded air terminal, mast, or overhead ground wire, wherein the risk of a direct lightning strike is substantially reduced. See Appendix 1.

© 1996 American Boat & Yacht Council, Inc.

4.5 *REQUIREMENTS - IN GENERAL*

4.5.1 To provide a conductive path for the adequate discharge of lightning currents, from the air terminal at the top of a lightning mast to the water (ground), the system shall

4.5. be essentially vertical, and

4.5.1.2 be essentially straight, and

4.5.1.3 have a conductivity not less than that of a #4 AWG (21.2mm^2) copper conductor, and

4.5.1.3.1 where the system consists of multiple shrouds, stays and mast, they shall have an aggregate conductivity not less than a #4 AWG (21.2mm^2) copper conductor.

4.5.2 Every metallic shroud and stay shall be connected from the chain plate directly to the ground plate or ground strip with a conductor at least #6 AWG (13.3mm^2).

4.5.3 No bend of a conductor shall form an included angle of less than 90°, nor

4.5.3.1 shall it have a radius of bend less than eight inches (203mm).

4.5.4 Large metal objects such as tanks, engines, deck winches, stoves, etc., within six feet (1.8m) of any lightning conductor shall be interconnected by means of a lightning bonding conductor at least equal to #6 AWG (13.3mm^2) copper.

NOTES: 1. To minimize flow of lightning discharge current through engine bearings, it may be preferable to bond engine blocks directly to the ground plate rather than to an intermediate point on the lightning protection system.

2. Large metal bodies on boats include any large masses such as bow and stern pulpits, steering pedestals, horizontal guardrails, handrails on cabin tops, smokestacks from galley stoves, electric winches, davits, metallic hatches, metallic arches, towers, engines, water and fuel tanks, and control rods for steering gear or reversing gear.

3. It is not intended that small metal objects such as compasses, clocks, galley stoves, medicine chests, and other parts of the boat's hardware be grounded.

4. For illustration purposes see Appendix, Figure 1.

4.6 *REQUIREMENTS - MATERIALS*

4.6.1 Corrosion - The material used in a lightning protective system shall be resistant to corrosion.

NOTE: Where it is necessary to join dissimilar metals, the corrosion effects can be reduced by the use of suitable plating or by installing a metal fitting between the two dissimilar metals that is galvanically compatible with both metals.

4.6.2 Wire Conductors

4.6.2.1 Wire conductors shall be stranded copper.

4.6.2.2 Stranding of copper wire shall be Type II stranding in accordance with ABYC E-8, *AC Electrical Systems on Boats*, and/or ABYC E-9, *DC Electrical Systems under 50 Volts*.

4.6.3 Other Conductive Means

4.6.3.1 Conductivity shall be equal to, or greater than, #6 AWG (13.3mm^2) copper wire.

4.6.3.2 The thickness of metal ribbon or strip shall be at least 1/32 inch (0.8mm).

4.6.3.3. Copper braid shall not be used.

4.7 *REQUIREMENTS - INSTALLATIONS*

4.7.1 To minimize side flashes, and the induction of high voltage to the boat's wiring, lightning conductors in proximity to the boat's wiring shall not be routed in parallel to the boat's wiring.

EXCEPTION: The primary lightning conductor.

4.7.2 Conductive Joints - Conductive joints shall be made and supported in accordance with ABYC E-9, *DC Electrical Systems Under 50 Volts*, and

4.7.2.1 shall have an electrical resistance not in excess of that of two feet (0.6m) of the smaller diameter conductor.

4.8 *LIGHTNING PROTECTIVE MAST*

4.8.1 The lightning protective mast shall be located so that the cone of protection will cover the entire boat. See Figure 1 and Figure 2.

4.8. 2 Additional lightning protective means shall be erected to form overlapping zones of protection, to protect a boat of the size that renders the use of a single mast impracticable.

© 1996 American Boat & Yacht Council, Inc.

NOTE: The zone of protection afforded by any configuration of masts, or other elevated, conductive, grounded objects, can readily be determined graphically. Increasing the height of a mast above the striking distance will not increase the zone of protection.

4.8.3 Lightning Protective Mast Alternatives

4.8.3.1 If the mast is composed of non-metallic material, the associated lightning or grounding conductor shall

4.8.3. be essentially straight, and

4.8.3.1.2 be securely fastened to the mast, and

4.8.3.1.3 extend at least six inches (150mm) above the mast, and

4.8.3.1.4 terminate in an air terminal, and

4.8.3.1.5 be led as directly as practicable to the grounding connection. See E-4.5.1.

NOTE: Although partially conductive, carbon fiber materials are regarded as non-conductive (non-metallic) for the purpose of this standard.

4.8.3.2 An outrigger that serves as a lightning protective mast shall have conductivity equivalent to #4 AWG ($21.2mm^2$) copper.

4.9 ***LIGHTNING GROUND***

4.9.1 Primary and Secondary Lightning Ground - A lightning ground for a boat shall consist of any metal surface which is submerged in the water having an area of at least 1 square foot ($0.1m^2$) and consist of at least one of the following methods.

4.9.1.1 External Ground Plate or Equivalent - The external ground plate shall be located as close to the base of the primary conductor as possible to minimize any horizontal runs in the primary conductor.

NOTE: The boat's rudders, struts, external ballast keel, or other external metallic surfaces may provide an external ground plate equivalent.

4.9.1.1.1 If the rudder(s) is used as an external ground plate equivalent, the lightning conductor shall be connected directly to the rudder shaft.

4.9.1.2 Grounding strip - An external grounding strip of copper, copper alloy, stainless steel, or aluminum, shall be installed under water to be used as an earth ground connection for the lightning system. This strip shall have a minimum thickness of 3/16 inch (5mm), and a minimum width of 3/4 inch (19mm).

NOTES: 1. The edges of the external ground plate or grounding strip need to be sharp, exposed, and not caulked or faired into the adjoining area.

2. A strip approximately one inch (250mm) wide, and 12 feet (3.7m) long, has nearly six times the amount of edge area exposed to the water, which, compared to the ground plates, will improve the dissipation of charges.

4.9.1.2.1 The grounding strip, if used, shall extend from a point directly below the lightning protection mast, towards the aft end of the boat, where a direct connection can be made to the boat's engine.

NOTES: 1. The use of two thru-bolts at each end of the strip will help to prevent the strip from twisting.

2. An equalization bus on the inside of the boat, paralleling the grounding strip on the outside of the boat, may be used as the lightning ground conductor.

4.9.2 Seacocks and Thru-Hull Fittings - Seacocks and thru-hull fittings, if connected to the lightning ground system, shall not be connected to the main down conductor. They shall be connected to

4.9.2. the underwater grounding strip, or

4.9.2.2 the lightning ground plate, or

4.9.2.3 the internal equalization bus.

4.9.3 Multihull boats shall provide a lightning ground connection in accordance with 4.9.1 for each hull that has items to be grounded, attached, or fitted to it.

4.10 ***REQUIREMENTS - VESSELS WITH METAL HULLS***

4.10.1 If there is electrical continuity between metal hulls and masts, or other metallic superstructures of adequate height in accordance with E-4.8, then no further protection against lightning is necessary.

4.11 ***REQUIREMENTS - SMALL BOATS***

4.11.1 Small boats without a permanent mast shall be protected by means of a temporary lightning protective mast that may be erected when lightning conditions are observed.

4.11.1.1 The base of the temporary lightning protective mast shall be located as close to the geometric center of the boat as possible, but, if necessary, can be offset, providing the cone of protection will cover the entire boat when the mast is plugged in.

© 1996 American Boat & Yacht Council, Inc.

4.11.1.2 The location of the mast base shall be such that persons on the boat can avoid physical contact with the mast or the base.

4.11.1.3 The base should extend as high as possible, and provision shall be made to plug in the upper section of the lightning mast so that it will not be displaced by the rolling and pitching of the boat in rough water.

4.11.1.4 The temporary lightning protective mast shall be all metal, or other material if provided with a conductor, with a conductivity at least equal to a #4 AWG (21.2mm^2) conductor.

NOTE: A solid stainless steel whip antenna or equivalent, that has a conductivity less than a #4 AWG (21.2mm^2) conductor, may be used, because of its higher melting temperature, but it will not provide as low a resistance path for the lightning.

4.11.1.5 The temporary lightning protective mast shall be connected to a submerged ground plate of at least one square foot (0.1 m^2) in area.

4.11.2 Open Daysailers - As stainless steel rigging may not provide an adequate conductive path for the discharge of lightning currents, protection will depend on the grounding of all rigging as well as the metal masts, or the continuous metallic tracks on nonmetallic masts. These shall be connected at the lower ends to a lightning grounding plate, or a lightning grounding strip located directly below the mast.

4.11.2.1 Metallic rudders at the aft end of the boat shall not be used as the lightning ground for the mast because of the need for a long horizontal conductor to the aft end of the boat.

4.11.2.2 The tiller, or other connections to metallic rudders that the operator will contact, shall be non-conductive materials.

4.11.2.3 Metallic keels or centerboards shall be directly connected to the lightning grounding plate or strip, and may serve as the lightning grounding means if they have the required one square foot (0.1 m^2) area in contact with the water. If a centerboard is used as the lightning grounding means, a warning sign shall be provided that clearly states that the centerboard must be in the down position to function as a lightning ground.

© 1996 American Boat & Yacht Council, Inc.

FIGURE 1 - BOAT WITH MAST NOT EXCEEDING 50 FEET (15M) ABOVE THE WATER

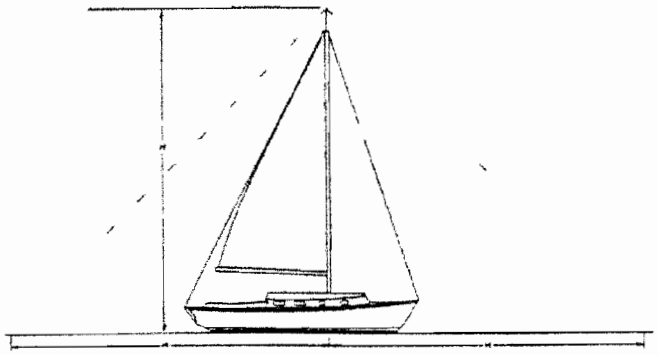

FIGURE 2 - BOAT WITH MAST NOT EXCEEDING 50 FEET (15M) ABOVE THE WATER

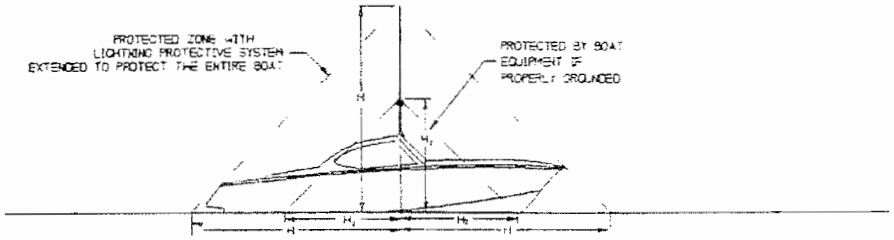

FIGURE 3 - BOAT WITH MASTS IN EXCESS OF 50 FEET (15M) ABOVE THE WATER - PROTECTION BASED ON LIGHTNING STRIKING DISTANCE OF 100 FEET (30M)

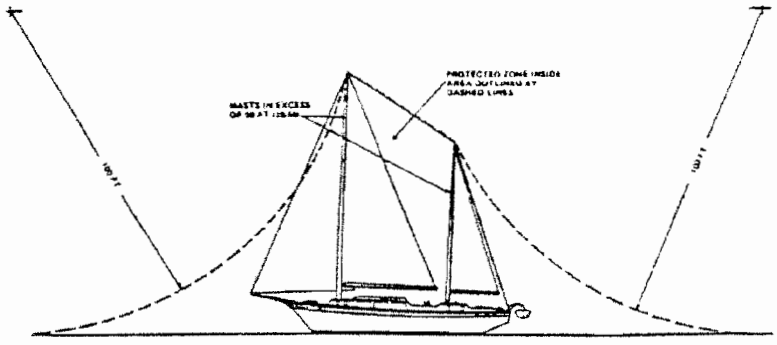

© 1996 American Boat & Yacht Council, Inc.

APPENDIX - LIGHTNING PROTECTION

This appendix contains additional descriptive information and recommendations pertaining to system maintenance and behavior of personnel.

Ap.1 Zone of Protection - A grounded conductor, or lightning protective mast, will generally divert to itself a direct strike that might otherwise fall within a cone-shaped space, the apex of which is the top of the conductor of a lightning protective mast, and the base of a circle at the surface of the water having a radius that is related to the height of the top of the conductor or lightning protective mast.

Ap.1.2 Boats with ungrounded or non-conductive objects projecting above the metal masts or superstructure may have these objects protected by a lightning ground conductor terminating in an air terminal above the object.

Ap.1.3 Whip type radio antennas should not be tied down during a lightning storm if they have been designed as a part of the lightning protection system.

Ap.2 Maintenance - Lightning protection provisions are likely to receive scant attention after installation. Therefore, their composition and assembly should be strong, and materials used should be highly resistant to corrosion.

Ap.2.1 Grounding of metallic objects for lightning protection may increase the possibility of harmful galvanic corrosion. See ABYC E-2, *Cathodic Protection of Boats.*

Ap.2.2 If a boat has been struck by lightning, compasses, electrical, and electronic gear should be checked to determine whether damage or changes in calibration have taken place.

Ap.2.3 If a boat has been struck by lightning, the lightning protection system should be inspected for physical damage, system integrity, and continuity to ground.

Ap.2.4 If a boat has been struck by lightning, it should be hauled for inspection of the hull, underwater structures and thru-hull fittings. Lightning can exit from one or numerous locations below the waterline. Subsequent flooding, sinking, or long term hull damage can result from undetected lightning damage.

Ap.3 Precautions for Personnel - The basic purpose of protection against lightning is to ensure the safety of personnel. It is therefore appropriate that during a lightning storm the following precautions be taken:

Ap.3.1 Personnel should remain inside a closed boat, as far as practical.

Ap.3.2 Arms and legs should NOT be dangled in the water.

Ap.3.3 Consistent with safe handling and navigation of the boat, personnel should avoid making contact with any items connected to a lightning protection system, and especially in such a way as to form a bridge between these items. For example, it is undesirable that an operator be in contact with reversing gear levers and a spotlight control handle at the same time.

Ap.3.4 Personnel should NOT be in the water.

Ap.3.5 Personnel should avoid contact with metal parts of a sailboat's rigging, spars, fittings, and railings.

Ap.4 For mast heights in excess of 50 feet (15m), the zone of protection is based on the striking distance of the lightning stroke. Since the lightning stroke may strike any object within the striking distance of the point from which final breakdown to earth ground (the water) occurs, the zone of protection is defined by a circular arc, concave upward. See Figure 2. The radius of the arc is the striking distance, and the arc passes through the tip of the mast, and is tangent to the water. Where more than one mast is used, the arc passes through the tips of adjacent masts. See Figure 3.

The striking distance is related to the peak stroke current, and thus to the severity of the lightning stroke. The greater the severity of the stroke, the greater the striking distance. In the vast majority of cases, the striking distance exceeds 100 feet (30m). Accordingly, the zone based on a striking distance of 100 feet (30m) is considered to be adequately protected.

The zone of protection afforded by any configuration of masts, or other elevated conductive grounded objects, can readily be determined graphically. Increasing the height of a mast above the striking distance will not increase the zone of protection.

Ap.5 Materials

Ap.5.1 The materials used in the lightning protection system should be resistant to corrosion. The use of combinations of metals that form detrimental galvanic couples should be avoided.

Ap.5.2 In those cases where it is impractical to avoid a junction of dissimilar metals, the corrosion effect can be reduced by the use of suitable plating or special connectors, such as stainless steel connectors used between aluminum and copper alloys. Except for the use of conducting materials that are part of the structure of the boat, such as aluminum masts, only copper should be used

© 1996 American Boat & Yacht Council, Inc.

as a lightning conductor system. Where copper is used, it should be of the grade ordinarily required for commercial electrical work, generally designated as being of 95 percent conductivity when annealed.

Ap.6 External Ground Plate - An exterior grounding plate of copper, copper alloys, stainless steel or aluminum may be provided by means of a plate which has an area of at least one square foot (0.1 m^2) area. The plate should be located as nearly as possible directly below the lightning protection mast. The boat's propeller(s), shaft(s), metallic rudder(s), and other metallic surfaces that have the required area, can be effectively used on small boats only where the lightning protective mast is located at the stern, above the in-water metallic objects to be used as the lightning system ground. The stern mast must be tall enough to provide a cone of protection that extends to the bow of the boat.

Ap.6.1 Boats that use a lightning grounding plate instead of the lightning grounding strip should ground backstays, or other objects aft, to the engine negative terminal, a metallic rudder, or other external ground at the aft end of the boat. The lightning ground shall not be routed through the boat to the lightning grounding plate forward under the lightning mast.

Ap.7 Grounding Strip - An external grounding strip of copper, copper alloys, stainless steel, or aluminum, installed under the boat in a fore and aft direction, may be used as the earth ground connection for the lightning system. Except for stainless steel, the strip should have a minimum thickness of 3/16 inch (4.8mm), and a minimum width of 3/4 inch (20mm). Stainless steel should have a minimum thickness of 1/8 inch (3.2mm). The length of the strip should extend from a point directly below the lightning protection mast, to the aft end of the boat, where a direct connection can be made to the boat's engine, but the total length of the strip shall not be less than four feet (1.22m). In a sailing vessel, the backstay and engine should be connected to the aft end of the strip. The strip should be secured to the hull with one, or preferably two, galvanically compatible through bolts at each end. The use of two bolts at each end, spaced one or two inches apart, will help prevent any tendency for the strip to rotate when the electrical connections are made inside the hull The strip must be located so that the external strip is submerged under all operating conditions. If the strip is not located so as to be submerged when a sailboat is heeled to port or starboard, then a strip will be required on both the port and starboard sides. All connections to the strip should be as short and direct as possible. Additional thru-hull bolts may be located along the length of the strip for additional connections, such as on a two masted sailboat. Because of the possibility of stray current corrosion of the securing bolts, the number of thru-hull bolts should be kept to a minimum. To minimize the number of thru-hull bolt connections, an equalization bus can be installed.

Ap.7.1 The aft end of the lightning grounding strip should be connected directly to the engine negative terminal. This will provide a path inside the hull for any DC stray currents that might be imposed on the thru-hull bolts that attach the lightning grounding strip where those bolts contact bilge water.

Ap.8 Protection of Equipment - Wherever possible, electronic equipment should be enclosed in metal cabinets that are connected to the lightning grounding system with a minimum #8 AWG (8.39mm^2) conductor. Surge suppression devices should be installed on all wiring entering or leaving electronic equipment.

Ap.8.1 The grounding of metal rod type radio antennas provides some protection for boats without masts and spars provided that

Ap.8.1.1 conductors in the grounding circuit of the antenna have a conductivity equivalent to #4 AWG (21.2mm^2) copper in accordance with E-4.5, and

Ap.8.1.2 the top of the antenna is not more than 50 feet (15m) above the water, and

Ap.8.1.3 a line drawn from the top of the antenna downward toward the water at an angle of 45 degrees to the vertical does not intercept any part of the boat (see E-4.8), and

Ap.8.1.4 the antenna loading coil is provided with a suitable protective device for bypassing the lightning current.

NOTES: 1. Because a loading coil presents a high impedance to the flow of lightning current, the portion of an antenna above the bottom of a loading coil is not as effective as a lightning protective mast.

2. Non-conducting antenna masts with spiral wrapped conductors are not considered suitable for lightning protection purposes.

Ap.8.2 In order to protect the radio transmitter, antenna feed lines shall be

Ap.8.2.1 equipped with a means for grounding during electrical storms, or

Ap.8.2.2 protected by lightning arresters or lightning protective gaps.

© 1996 American Boat & Yacht Council, Inc.

AP. FIGURE 1 - LIGHTNING PROTECTION SYSTEM

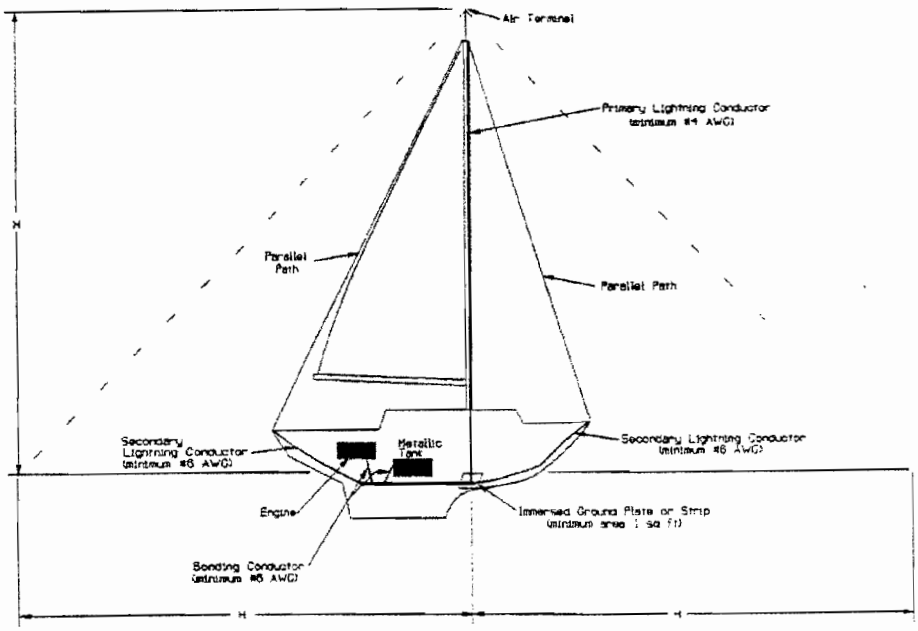

NOTES: 1. An equalization bus is used on the interior of the hull as the termination for secondary conductors and bonding conductors. The primary conductor is connected directly to the immersed ground plate or strip. See E-4.9.

2. All otherwise isolated bare metal objects within six feet (1.8m) of a lightning conductor shall be connected to the lightning protection system with a minimum #6 AWG (13.3mm^2) bonding conductor.

3. The probability of a lightning strike varies with geographic location and the time of the year. When the conditions that create an electrical charge between clouds and the earth exist, there is nothing that can be done to prevent the lightning discharge. A boat can be struck in open water or while tied to the dock.

© 1996 American Boat & Yacht Council, Inc.

COMMISSIONING PACKAGE **06/05/03**

SAFETY PACKAGE, FACTORY OPTIONS

Contents subject to change without notice.

Qty.	Description
1 each	CQR 22 LB. Dan Forth Anchor
20 foot	Acco 5/16" Galvanized Hi- test Chain
1 each	New England 1/2x250' anchor line
2 each	3/8 galv anchor shackle
2 each	Taylor 8"x20" Superguard Fender
14 foot	New England 3/8 fender line
1 each	Stearns USCG white throwable cushion
1 each	Aluminum folding radar reflector
3 each	XLT Alert
3 each	Locate Flare Kit
1 each	Tempo "Nature Safe" horn
2 each	Kidde 10BC fire extinguisher
1 each	Medical Sea Pack First Aid Kit
1 each	Koehl halogen flashlight (with batteries)
6 each	Kent USCG Type I lifejacket
1 each	Chapmans Piloting & Small Boat Handling 63rd. Ed
4 each	New England 5/8x25' dock line
1 each	Beckson yacht log book

LITERATURE AND WARRANTIES FOR EQUIPMENT WHICH MAY BE SUPPLIED WITH THIS MANUAL:

Batteries, 12 volt wet cell

Headsail furling gear

Dutchman flaking system

Furling mainsail mast

Furling mainsail boom

Diesel engine

Factory installed electronics (separate manual)

Running lights

Marine head

Galley stove with oven

Bilge pump, manual

Bilge pump, electric

Pedestal steering

Water heater

Pressure water pump

Rudder bearings

Dripless shaft seal

Anchor windlass

Through-hull valves "seacocks"

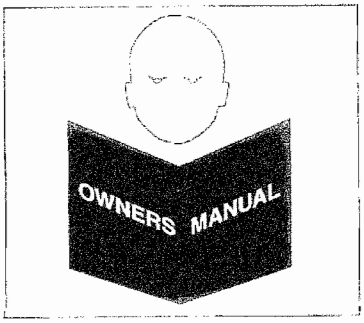

! WARNING

Read the Owners Manual before using this vessel

INSTALL NEXT TO ENGINE PANEL OR DIRECTLY BELOW HULL I.D. PLATE.

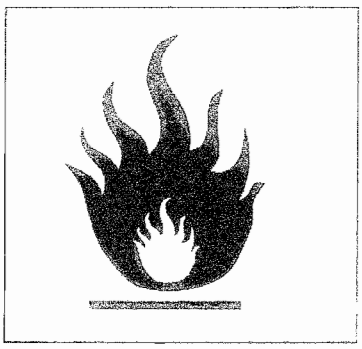

! WARNING

Keep curtains away from stove when it is being used

INSTALL ON DECK LINER UNDER WINDOW OVER GALLY STOVE.

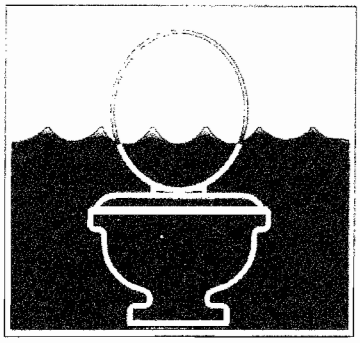

! WARNING

Close the through hull valves each time the head is used

ON VERTICAL SURFACE BEHIND EACH TOILET.

! WARNING

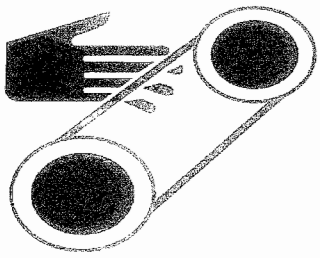

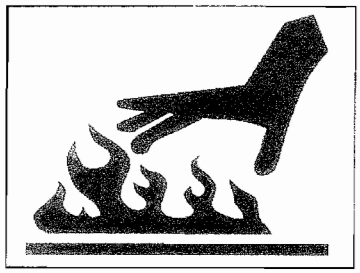

Do Not open door to the engine compartment while engine is running

INSTALL ON ENGINE COVER.

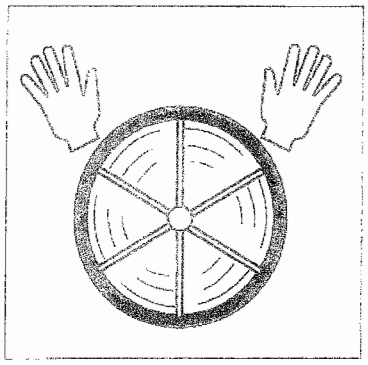

ϟ DANGER

Keep hold of the wheel when backing up

INSTALL ON STEERING PEDESTAL ABOVE INSTRUMENT HOUSING.

ADJACENT TO VALVE LOCATION ON BULKHEAD.

DANGER

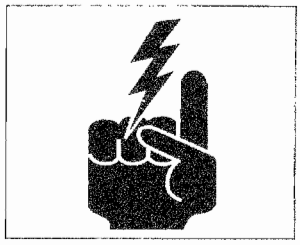

- Watch for overhead wires
- Stay away from overhead power lines

EACH SIDE 2-REQUIRED ON MAST 12" FROM BOTTOM.

Catalina Yachts reminds you that is illegal for any vessel to dump plastic trash anywhere in the ocean or navigable waters or the United States, Annex V of the **Marpol Treaty** is an International Law for a cleaner, safer marine environment. Violation of these requirements may result in civil penalty up to $25,000. fine and imprisonment.

IT IS ILLEGAL TO DUMP THE FOLLOWING:

U.S. Lakes, Rivers, Bays, Sounds, and 3 Miles From Shore		3 to 12 Miles		12 to 25 Miles	Outside 25 Miles
Plastics	Garbage	Plastic, Dunnage, Linning and Packing Materials That Float, Also If Not Ground to Less Than One Inch:		Plastic, Dunnage, Linning and Packing Materials that Float.	Plastic
Paper	Metal				
Rags	Crockery				
Glass	Dunnage				
Food		Paper	Crockery		
		Rags	Metal		
		Glass	Food		

State and Local Regulations May Further Restrict the Disposal of Garbage.

INSTALL IN COMPANIONWAY

- THE ENGINE MUST BE ALIGNED TO THE SHAFT WITHIN .003".
- THIS COUPLING WAS ATTACHED TO THE SHAFT AT THE FACTORY.
- THIS SHAFT IS DIMPLED FOR THE SET SCREWS. THE SET SCREWS ARE SAFETY WIRED TO PREVENT THEM FROM BACKING OUT.
- IF THE SAFETY WIRE IS BROKEN OR IS REMOVED, THE ENGAGEMENT OF THE SET SCREWS MUST BE VERIFIED AND THE SAFETY WIRE SECURED BEFORE OPERATION.

INSTALL ON SHAFT COUPLING AFTER POOL TEST.

WARNING

THESE TIE RODS SUPPORT THE MAST. THE LOCKING NUTS AT THE BOTTOM END MUST BE TIGHT AGAINST THE BEARING SURFACE. CHECK THE LOCKING NUTS, CLEVIS PINS AND COTTER PINS IN THIS ASSEMBLY BEFORE STEPPING THE MAST TO VERIFY THAT NO COMPONENTS HAVE LOOSENED DURING TRANSPORTATION
THIS BOAT HAS_____TIE RODS.

INSTALL ON ONE CHAIN ROD ONLY

DISCHARGE OF OIL PROHIBITED

THE FEDERAL WATER POLLUTION CONTROL ACT PROHIBITS THE DISCHARGE OF OIL OR OILY WASTE INTO OR UPON THE NAVIGABLE WATERS AND CONTIGUOUS ZONE OF THE UNITED STATES, IF SUCH DISCHARGE CAUSES A FILM OR SHEEN UPON, OR DISCOLORATION OF, THE SURFACE OF THE WATER, OR CAUSES A SLUDGE OR EMULSION BENEATH THE SURFACE OF THE WATER. VIOLATORS ARE SUBJECT TO A PENALTY OF $5,000.

INSTALL ON ENGINE COVER.

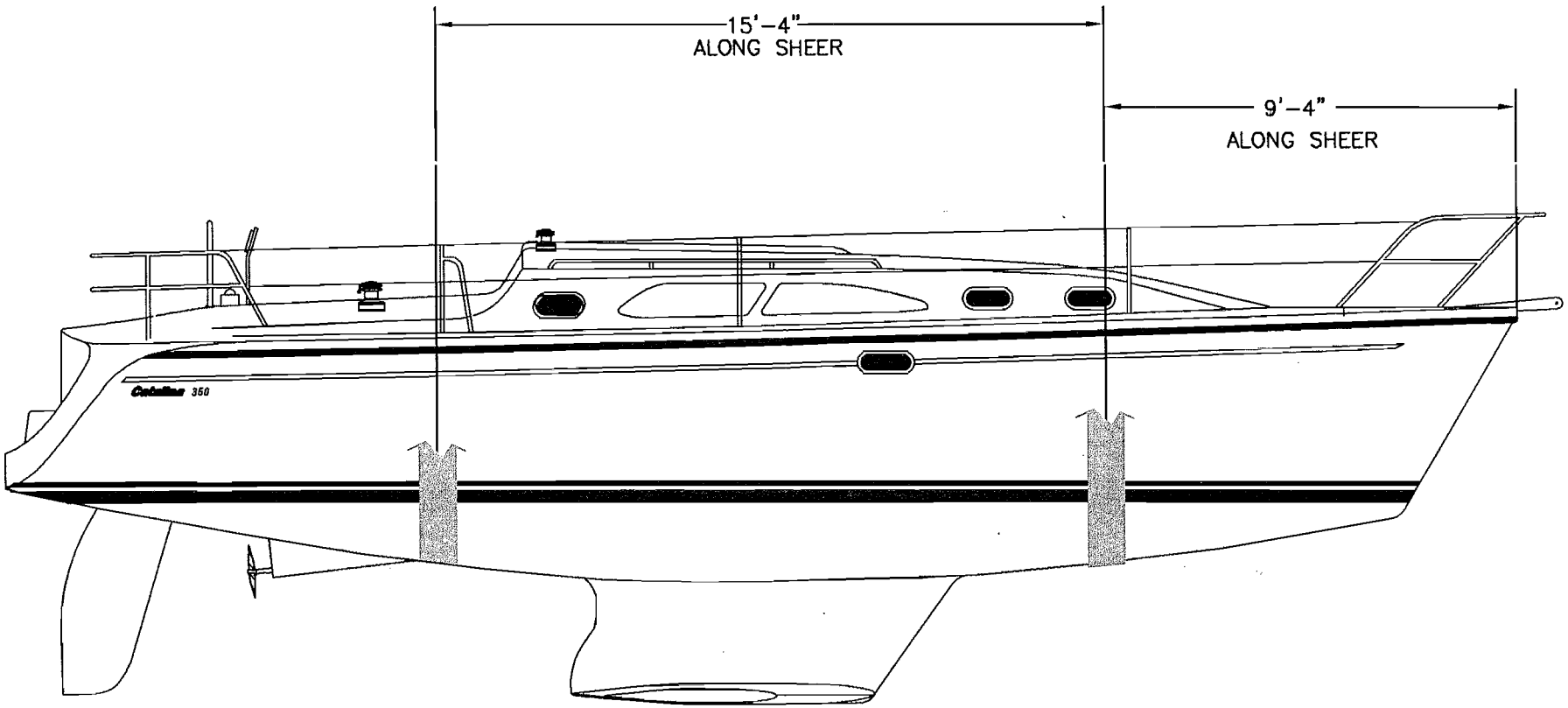

PROPRIETARY INFORMATION

THE DESIGNS, INFORMATION, AND DATA CONTAINED HEREIN ARE PROPRIETARY AND ARE SUBMITTED IN CONFIDENCE, AND SHALL NOT BE DISCLOSED, USED, OR DUPLICATED, IN WHOLE OR IN PART, FOR ANY PURPOSES WHATSOEVER, WITHOUT THE PRIOR WRITTEN PERMISSION OF CATALINA YACHTS, 21200 VICTORY BLVD. WOODLAND HILLS, CALIFORNIA 91367. THIS LEGEND SHALL BE MARKED ON ANY REPRODUCTIONS HEREOF IN WHOLE OR IN PART. RECEIPT OF THIS DOCUMENT SHALL BE DEEMED TO BE AN ACCEPTANCE OF THE CONDITIONS SPECIFIED HEREIN.

UNLESS OTHERWISE SPECIFIED DIMENSIONS ARE IN INCHES

GENERAL TOLERANCES
ANGLES : ±0.5°
X.X : ±0.1
X.XX : ±0.01
X.XXX : ±0.005
SURFACE FINISH: 63

DO NOT SCALE DRAWING

Catalina Yachts
7200 BRYAN DIARY RD.
LARGO, FL. 33777
(727) 544-6681

TITLE: LIFT POINTS

BOAT: CATALINA 350		DRAWING NO: 350-91052-0		
DESIGNED BY:	CHECKED BY:	SCALE: NONE	SIZE	SHEET
DRAWN BY: C.D.	APPROVED BY:	DATE: 02/08/02	B	1/1

INTERNATIONAL MARINE CERTIFICATION INSTITUTE
International Non-Profit Association
Rue Abbé Cuvelier 3
B - 1040 BRUXELLES
BELGIQUE
Tel: +32 2 741 6838
fax: +32 2 741 2418

Statement of Conformity

We hereby certify that the following boat type

Catalina Yachts, Inc.

CATALINA 350

Boat type:	Sail
Boat design category:	A
Modul type:	Aa
Examination type:	No
Length of hull [m]:	10,74
Beam of hull [m]:	3,92
Loaded displacement mass [kg]:	7.922
Maximum rated engine power [kW]:	28,0
Number of Persons recommended:	8
Recommended load [kg]:	963
Certificate Number:	BCATAL014

meets the Essential Safety Requirements 3.2 for Stability and Freeboard and 3.3 for Buoyancy and Floatation of the EC Directive 94/25/EC for Recreational Craft

Ulrich Heinemann (Managing Director)

for EU - Notified Body : 0609

2002-01-09

This certificate is valid for boats identified by the HIN as a

2002 or

2003 model